CITIZEN
Micro HumanTech

DOT MATRIX PRINTER

MODEL CBM920II

User's Manual

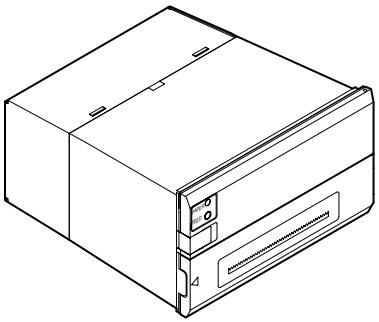

CITIZEN SYSTEMS JAPAN CO., LTD.

WEEE MARK

En If you want to dispose this product, do not mix with general household waste. There is a separate collection systems for used electronics products in accordance with legislation under the WEEE Directive (Directive 2002/96/EC) and is effective only within European Union.

Ge Wenn Sie dieses Produkt entsorgen wollen, dann tun Sie dies bitte nicht zusammen mit dem Haushaltsmüll. Es gibt im Rahmen der WEEE-Direktive innerhalb der Europäischen Union (Direktive 2002/96/EC) gesetzliche Bestimmungen für separate Sammelsysteme für gebrauchte elektronische Geräte und Produkte.

Fr Si vous souhaitez vous débarrasser de cet appareil, ne le mettez pas à la poubelle avec vos ordures ménagères. Il existe un système de récupération distinct pour les vieux appareils électroniques conformément à la législation WEEE sur le recyclage des déchets des équipements électriques et électroniques (Directive 2002/96/EC) qui est uniquement valable dans les pays de l'Union européenne.
Les appareils et les machines électriques et électroniques contiennent souvent des matières dangereuses pour l'homme et l'environnement si vous les utilisez et vous vous en débarrassez de façon inappropriée.

Sp Si desea deshacerse de este producto, no lo mezcle con residuos domésticos de carácter general. Existe un sistema de recogida selectiva de aparatos electrónicos usados, según establece la legislación prevista por la Directiva 2002/96/CE sobre residuos de aparatos eléctricos y electrónicos (RAEE), vigente únicamente en la Unión Europea.

It Se desiderate gettare via questo prodotto, non mescolatelo ai rifiuti generici di casa. Esiste un sistema di raccolta separato per i prodotti elettronici usati in conformità alla legislazione RAEE (Direttiva 2002/96/CE), valida solo all'interno dell'Unione Europea.

Du Deponeer dit product niet bij het gewone huishoudelijk afval wanneer u het wilt verwijderen. Er bestaat ingevolge de WEEE-richtlijn (Richtlijn 2002/96/EG) een speciaal wettelijk voorgeschreven verzamelsysteem voor gebruikte elektronische producten, welk alleen geldt binnen de Europese Unie.

Da Hvis du vil skille dig af med dette produkt, må du ikke smide det ud sammen med dit almindelige husholdningsaffald. Der findes et separat indsamlingssystem for udtjente elektroniske produkter i overensstemmelse med lovgivningen under WEEE-direktivet (direktiv 2002/96/EC), som kun er gældende i den Europæiske Union.

Por Se quiser deitar fora este produto, não o misture com o lixo comum. De acordo com a legislação que decorre da Directiva REEE – Resíduos de Equipamentos Eléctricos e Electrónicos (2002/96/CE), existe um sistema de recolha separado para os equipamentos electrónicos fora de uso, em vigor apenas na União Europeia.

Pol Jeżeli zamierzasz pozbyć się tego produktu, nie wyrzucaj go razem ze zwykłymi domowymi odpadkami. Według dyrektywy WEEE (Dyrektywa 2002/96/EC) obowiązującej w Unii Europejskiej dla używanych produktów elektronicznych należy stosować oddzielne sposoby utylizacji.

Declaration of Conformity

This printer conforms to the following Standards:

Low Voltage Directive 73/23/EEC, 93/68/EEC and the EMC Directive 89/336/EEC, 92/31/EEC, 93/68/EEC.

LVD : EN60950-1

EMC : EN55022 Class A
EN61000-3-2
EN61000-3-3
EN55024

This declaration is applied only for 230V model.

IMPORTANT: This equipment generates, uses, and can radiate radio frequency energy and if not installed and used in accordance with the instruction manual, may cause interference to radio communications. It has been tested and found to comply with the limits for a Class A computing device pursuant to Subpart J of Part 15 of FCC Rules, which are designed to provide reasonable protection against such interference when operated in a commercial environment. Operation of this equipment in a residential area is likely to cause interference, in which case the user at his own expense will be required to take whatever measures may be necessary to correct the interference.
CAUTION: Use shielded cable for this equipment.

Sicherheitshinweis
Die Steckdose zum Anschluß dieses Druckers muß nahe dem Gerät angebracht und leicht zugänglich sein.

For Uses in Canada
This Class A digital apparatus complies with Canadian ICES-003.
This digital apparatus does not exceed the class A limits for radio noise emissions from digital apparatus, as set out in the radio interference regulations of the Canadian department of communications.

Pour L'utilisateurs Canadiens
Cet appareil numérique de la classe A est conforme à la norme NMB-003 du Canada.
Cet appareil numérique ne dépasse pas les limites de carégorie a pour les émissions de bruit radio émanant d'appareils numériques, tel que prévu dans les réglements sur l'interférence radio du départment Canadien des communications.

GENERAL PRECAUTIONS

- Before using this product, be sure to read through this manual. After having read this manual, keep it in a safe, readily accessible place for future reference.
- The information contained herein is subject to change without prior notice.
- Reproduction or transfer of part or all of this document in any means is prohibited without permission from Citizen Systems.
- Note that Citizen Systems is not responsible for any operation results regardless of missing, error, or misprinting in this manual.
- Note that Citizen Systems is not responsible for any trouble caused as a result of using options or consumables that are not specified in this manual.
- Except explained elsewhere in this manual, do not attempt to service, disassemble, or repair this product.
- Note that Citizen Systems is not responsible for any damage attributable to incorrect operation/handling or improper operating environments that are not specified in this manual.
- Data is basically for temporary use and not stored for an extended period of time or permanently. Please note that Citizen Systems is not responsible for damage or lost profit resulting from the loss of data caused by accidents, repairs, tests or other occurrence.
- If you find loss of information, error, or uncertain matter, please contact your Citizen Systems dealer.
- If you find any disordered or missing page(s), contact your Citizen Systems dealer for replacement.

CITIZEN is registered trade mark of CITIZEN WATCH CO., LTD., Japan
CITIZEN es una marca registrada de CITIZEN WATCH CO., LTD., Japón

SAFETY PRECAUTIONS -WHICH SHOULD BE STRICTLY OBSERVED

In order to prevent injury hazard to operators, third parties or damage to property, special warning symbols are used in this user's manual to indicate important items to be strictly observed. Please be familiar with the following precautions before reading this manual.

- The following describes the degree of hazard and damage that could occur if the printer is improperly operated by ignoring the instructions indicated by the warning symbols.

Warning	**Neglecting precautions indicated by this symbol may result in fatal or serious injury.**
Caution	**Neglecting precautions indicated by this symbol may result in injury or damage to properties.**

This symbol is used to alert your attention to important items.

ORDINARYMAINTENANCE

- Make sure to maintain the equipment after switching OFF the power .
- When cleaning the platen of printer mechanism, wipe out the dirty portion by a cotton pad dipped intoethyl alcohol.
- When cleaning the surface of the main unit case, use soft cloth. In case the dirty portion can not becleared out by the soft cloth, use wet cloth squeezed tightly. Absolutely do not use thinners, truculence,benzene or ketene group solvents, or chemical-impregnated cleaning cloths.
- At least, leave cleaning of the inside of this equipment to your sales shop once a year. Using thisequipment keeping dirty without cleaning the insidemay cause a fire or breakage of the equipment.

⚠ WARNING

- Never handle the printer in the manners described below; otherwise, it may be damaged, get out of order or overheated, possibly causing smoke, fire or electric shock.
  If the printer is damaged or breaks down, be sure to turn off the power, disconnect the power plug from the wall outlet, and contact your CITIZEN SYSTEMS dealer.
  - Do not allow the printer to be subjected to any strong impact or shock, such as stamping, hitting, dropping, and the like.
  - Install the printer in a well-ventilated place. Do not use the printer in such a manner that its ventilation slots are blocked.
  - Do not install the printer in a place like a laboratory where chemical reactions are expected, or in a place where saltish gases are present in the atmosphere.
  - Use the printer only on the specified voltage and frequency.
  - Do not connect/disconnect the power cord or data cable by holding the cable. Do not pull or carry the printer in such a manner that undesirable force is applied to the cables.
  - Do not drop or insert any foreign substances, such as paper clips or pins, into the printer.
  - Avoid using excessively long power cord or data cable or multiple connections.
  - Do not use power cord or data cable with a scratch or crack or with poor connection.
  - Do not spill any liquid on or spray any chemical-containing liquid over the printer. If any liquid is spilled on the printer, turn it off, disconnect the power cord from the wall outlet, and contact your CITIZEN SYSTEMS dealer.
  - Do not disassemble or modify the printer in any manner; otherwise, a fire or electric shock may result.
- The plastic bag the printer came in must be disposed of properly or kept away from children. Wearing it over the head may lead to suffocation.

PRECAUTIONS FOR INSTALLATION

- Do not use or store the printer in a place exposed to heat of fire, moisture or direct sunlight, or in a place where the prescribed operating temperature and humidity are not met, or in a place exposed to oily mist, iron powder or dust; otherwise, the printer may get out of order, emit smoke or catch fire.
- Do not install the printer in a place like a laboratory where chemical reactions are expected, or in a place where saltish gases are present in the atmosphere; otherwise, there may occur a danger of fire or electric shock.
- Fix the printer to the vertical panel of a sturdy mount in a place with good ventilation and free from any vibration.
- Avoid installing and using the printer where its operation may be discouraged.
- Do not put any object on the printer, or this may cause a trouble.
- Fix the printer using the bracket and screws supplied with the printer. Tighten the screws firmly and appropriately. Excessive tightening may result in the malfunction or breakage of the printer.
- Do not use the printer near a radio or television receiver. Avoid sharing an electrical outlet with a radio or television receiver, or this may cause a reception problem.
- Use the printer only on the specified voltage and current capacity. Be sure the + pole and grounding are not connected reversely. Otherwise, the printer may emit smoke or fire.
- Confirm that the wall outlet used for printer connection has sufficient electrical capacity.
- Avoid sharing a single electrical outlet with other devices or using excessively extended power cord; otherwise, the electrical capacity may be exceeded, causing the power cord to emit smoke or fire or the power supply to be shut down. Also, do not stamp on the power cord or put any object on it. Do not use the printer with excessive stress (tension, load, etc.) applied on the power cord.
- Never connect the grounding cable to a gas pipe, or this may lead to a danger of explosion. Before connecting or disconnecting the grounding cable, be sure to disconnect the power plug from the wall outlet.
- Be sure to turn off the power of the printer and the host computer connected before connecting or disconnecting the cables; always hold both plug and cable. Do not pull or carry the printer in such a manner that an undesirable load is applied to the cables.
- Connect the connector cables correctly and securely. Especially, if a connection is made with the polarity reversed, internal elements inside the printer may be damaged or the host computer connected may be adversely affected.
- Do not use excessive extension of signal wires or connection to the equipment that is likely to generate much noise to prevent data from being affected by noise.
- Install and use the printer in a place provided with a suitable wall outlet nearby so that you can immediately disconnect the power plug to shut off the power to the printer if an abnormal condition occurs.
- Before transporting the printer, remove the ink ribbon and the paper roll from the printer.

PRECAUTIONS FOR HANDLING

Do not handle the equipment in the following manners, because problems may result.

- Do not print when there is no recording paper or ink ribbon set in the printer. Otherwise, print head may be damaged.
- Be careful not to drop foreign substances, such as clips, pins, and screws, into the equipment.
- Do not spill any liquid or spray any chemical-containing liquid over the equipment.
- Do not stamp on, drop, hit, or give a strong shock to the equipment.
- Never use a pointed object, such as a pen, to operate the operation panel.
- Do not use Scotch tape to fasten paper together for continuous use.
- Never pull the set paper forcibly or pull the paper in the direction reverse to the paper feed direction.
- Replace the ink ribbon before it is broken by overuse. Do not refill the ink ribbon.
- Remove the ribbon cassette when the printer is left unused for a long time.
- Leaving the printer unused for a long time with a ribbon cassette loaded may cause smudged printing. Continuous printing at low temperature may cause thin printing due to the characteristic of ink.
- Do not deliver the printer with a ribbon cassette and roll paper loaded.

To Prevent Injury and Spreading of Damage

- Do not touch the printing part of the print head.
- While the equipment power is on, do not touch the moving parts, such as a cutter and gear, or electric parts inside the equipment.
- Please place neither hand nor the finger when you open and shut the panel.
- Be careful to avoid bodily injure or damaging other objects with an edge of sheet metal.
- Should any error occur while operating the equipment, stop using it immediately, disconnect the power plug from the plug socket, and then contact your CITIZEN SYSTEMS dealer.
- In case of a failure, do not attempt to disassemble the printer. Refer the repair service to your nearest CITIZEN SYSTEMS dealer or service personnel.

THE TABLE OF CONTENTS

1. INTRODUCTION 8
1.1 Features 8
1.2 Accessories 8

2. TYPE CLASSIFICATIONS 9
2.1 Type 9
2.2 Power supply 9
2.3 Specifications 10

3. EXTERNAL APPEARANCE AND PART DESCRIPTIONS 11
3.1 External Appearance 11
3.2 Part Descriptions 12

4. OPERATIONS 13
4.1 Rack Mounting 13
4.2 I/F Cable Connection 14
4.3 Panel Opening/Closing 15
4.4 Paper Feeding 16
4.5 Setting Ribbon Cassette 16
4.6 Setting Paper 17
4.7 Auto Loading Function 19
4.8 Self-printing Function, Hexadecimal Printing Function 20
4.9 Memory Switch Setting 21
4.10 PNE, PE, Other errors 25
4.11 Clearing Lamp Status, I/F signal status, error, etc. 26
4.12 Special Functions 27

5. PARALLEL INTERFACE 28
5.1 Specifications 28
5.2 Connector Pin Assignment 28
5.3 Description of Input/Output Signals 29
5.4 Electrical Characteristics 30

6. SERIAL INTERFACE 31
6.1 Specifications 32
6.2 Connector Pin Assignment 31
6.3 Description of Input/Output Signal 32
6.4 Electrical Characteristics 32
6.5 Error Detection 33

7. DIP SWITCH (SW1) SETTING 34
7.1 DIP Switch Position 34
7.2 Parallel Interface Type 34
7.3 Serial Interface Type 35
8. PRINT CONTROL FUNCTION 36
8.1 List of Control Codes 36
8.2 Control Code Details 37
9. CHARACTER CODE TABLE 49
9.1 Code page table 49
9.2 International Character Code Table 53
10. EXTERNAL DIMENSIONS 54

1. INTRODUCTION

The CBM-920II is a dot-impact printer widely usable with various data communication terminals, POS terminal and measurement terminals.THE CBM-920II, a compact type printer with rated into a rack.
This printer, being compact and equipped with extensive functions, is suitable to a wide range of applications.
Read this manual thoroughly to understand the product before use.

1.1 Features

1. Compact desk-top dot matrix printer
2. Light weight
3. Paper-near-end detecting function
4. Autoloading function
5. Conformity to RS-232C and Centronics.
6. 40 digit 24 print digit number digits/type is prepared.
7. Low price
8. Abundant initialization functions with external switch and internal memory switch
9. CBM-920 emulation
10. CBM-920, iDP3110 emulation selectable

1.2 Accessories

Confirm that the printer is supplied together with the following accessories.

Paper roll (1 roll)
Ribbon cassette (1 unit)
I/F cable (1)
Rack Including mounting brackets (1 unit)
Installation metal fittings fixation screw (2)
Wire clamping (1)
User's manual (1 booklet)

2. TYPE CLASSIFICATIONS

2.1 Type

The product is categorized according to the naming plan indicated below.

CBM-920II	-	24 40	R P	J F	-XXX

CBM-920II - 24 R J -XXX

Model Name

Number of columns
24: 24 columns/144 dots
(MD-910 mechanism use)
40: 40 columns/180 dots
(MD-911 mechanism use)

Interface
R: Serial (RS-232C)
P: Parallel (Conformity to Centronics)

Character set
J: Japan
F: International

OEM spec.

2.2 Power supply

Prepare stable power supply having voltage of DC +5V ±5% and current capacity of 2.5A or more and a peak current of 4 A or more.

NOTE

The power supply of this printer is internally separated in two: one is for control circuit and the other is for driving mechanism. The supply voltage may be lowered even if the rating of the power used is sufficient depending on the current consumption during printing or on the length of the power cord.
In such a case, reconfirming the wiring or power supply used or separating the power supply for control system and driving mechanism from each other is recommended.

Control power supply (Vcc)	DC+5V± 5%	0.2A or more
Driving power supply (Vp)	DC+5V±10%	2.5A or more (Peak current 4A or more)

2.3 Specifications

	Item	CBM-920II-24**	CBM-920II-40**
1	Printing method	Dot matrix	
2	Printing direction	One-way printing (normal character, inverted character)	
3	Character configuration (W × H)	(5 + 1) × 8	(4 + 0.5) × 8
4	Character size (W × H)	1.62 × 2.4 mm	1.08 × 2.4 mm
5	Number of columns per line	24 columns: 144 dots/line	40 columns: 180 dots/line
6	Printing speed	Approx. 2.5 lines/sec.	Approx. 1.8 lines/sec.
7	Character spacing	1.98 mm	1.19 mm
8	Line pitch	3.52 mm	
9	Paper feed speed	Approx. 5 lines/s	Approx. 3.6 lines/s
10	Paper	Single sheet (Thickness: 0.09 mm or less) Paper roll: 57.5 ±0.5 (W) × ϕ50 mm Core ID: ϕ12 ±1 mm Core OD: ϕ18 ±1 mm	
11	Interface	Serial Interface (RS-232C) or Parallel Interface (Conformity to Centronics)	
12	Input buffer	2k bytes/72 bytes (Selectable by memory SW)	
13	Emulation	CBM-920 emulation and IDP3110 emulation (selectable with memory SW)	
14	Code page	CP437, 852, 857, 858, 860, 863,865, 866, 869, WPC1252, Katakana, CBM-920 emulation (Japan, International), Blank page	
15	International character	Character of 14 countries is available.	
16	Special mode	Hexadecimal dump printing, Memory SW setting	
17	Paper-near-end detection	Detected when printing paper gets scarce.	
18	Paper-end detection	Printing suspended when printing paper is lost.	
19	Autoloading function	Feeds paper by a specified amount when printing paper is set.	
20	Error detection	Mechanical lock error, Memory check error, Low voltage/High voltage error	
21	Ink ribbon	Black (Dedicated ribbon cassette) Service life: Approx. 200,000 letters	
22	Voltage	Control system: DC5V ±5% (0.2A) Driving system: DC5V ±10% (Approx. 2.5A, Approx. 4A peak) * The user is requested to prepare external power supply.	
23	Power consumption	Printing: Approx. 7 VA (Duty: 12%) Stand-by: Approx. 0.5 VA	
24	Weight	Approx. 500 g (Including mounting brackets, ribbon cassette)	
25	Reliability	MCBF: Approx. 1.5 million lines	MCBF: Approx. 1 million lines
26	Dimension	115 (W) × 65 (H) × 119(D) mm	
27	Panel installation hole size	109 (W) × 62 (H) +0 mm, -0.5mm	
28	Operating temperature and humidity	0 to 40°C, 35 to 85% RH (without condensation)	
29	Storage temperature and humidity	–20 to 60°C, 10 to 90% RH (without condensation)	
30	Safety standard	UL (RU), TUV-TUV, CE-Marking VCCI Class A, FCC Class A	

3. EXTERNAL APPEARANCE AND PART DESCRIPTIONS

3.1 External Appearance

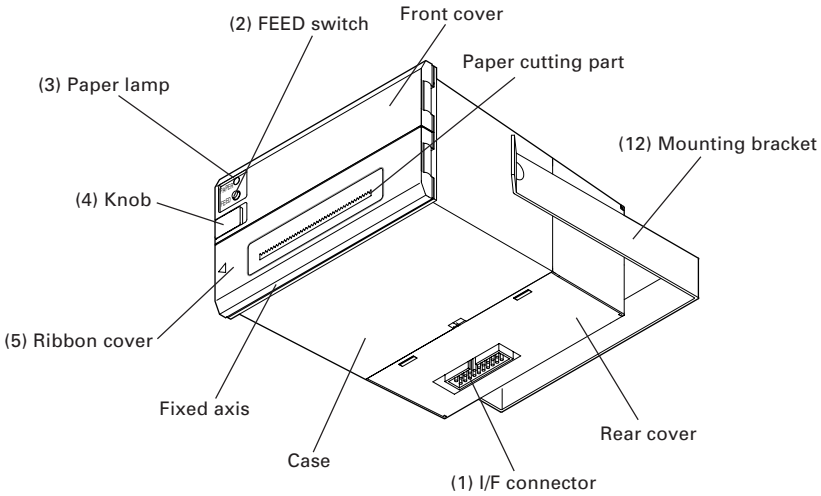

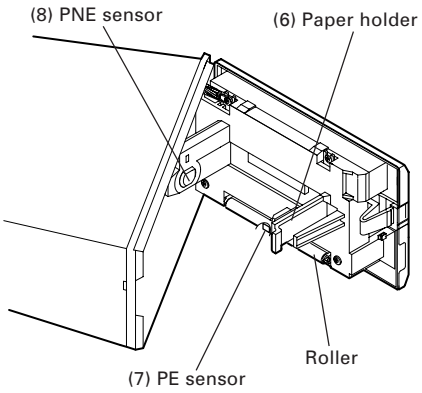

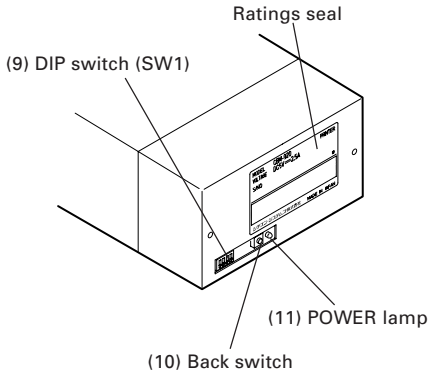

3.2 Part Descriptions

(1)	I/F connector (Interface connector)	Printer can be connected to the signal line of various kinds of host via a cable. Please ensure that both the printer and the host are turned off before connecting or disconnecting. This connector also has a power input. Connect the FG terminal to the earth. Cable connected differs with the interface.
(2)	FEED switch	Paper is fed while this switch is pressed and held. Turning the printer power on while pressing and holding this switch causes self-printing to start. In the memory switch setting mode, various kinds of setting are available by pressing this switch.
(3)	Power lamp	Lights/blinks when the paper has become scarce or run out. The lighting status depends on the memory switch setting. Blinks when mechanism error or the like occurs depending on the condition of memory switch setting.
(4)	Knob	Used to set paper or to open the front cover when setting or replacing paper.
(5)	Ribbon cover	Opened/closed when replacing the ink ribbon cassette. Can open when you pull the left side of the front face toward you.
(6)	Paper holder	Printing paper is set and fixed here. Insert the print paper into the paper inlet and then set the paper.
(7)	PE sensor	Detects no paper condition.
(8)	PNE sensor	Detects paper-low condition. This function is enabled or disabled depending on the mode or memory switch setting.
(9)	DIP switch (SW1)	This switch allows basic initial setting. Use this switch before turning on the printer.
(10)	Back switch	Press this switch to use special function. This switch is not used in normal operation.
(11)	POWER lamp	Lighted when power is turned ON. Blinks at the occurrence of error or during memory switch setting.
(12)	Mounting bracket	A bracket to hold the printer body. Hold the printer to the panel or the like by using the two screws supplied.

4. OPERATIONS

4.1 Rack Mounting

(1) As in the following drawing, insert themain body into the rack.

(2) Inserting the main body on the rear side with mounting bracket, fasten thema in body with the screws.
Pay attention not to tighten screws excessively.

(3) After fixing, confirm opening/closing of the front panel, etc..

NOTE

The mount (rack, etc.) shall be about 1 to 3 mm in thick.
Use the material that is free from deformation for the mount when the printer is placed to the mount.
Tighten the screws taking not to give deformation to the printer, bracket, or mount. Excessive tightening of screw not only provides stress on the printer but also causes failure in the printer.

Recommended mounting hole dimensions
109 (W) x 62 (H) mm
Tolerance:+0 mm, -0.5 mm

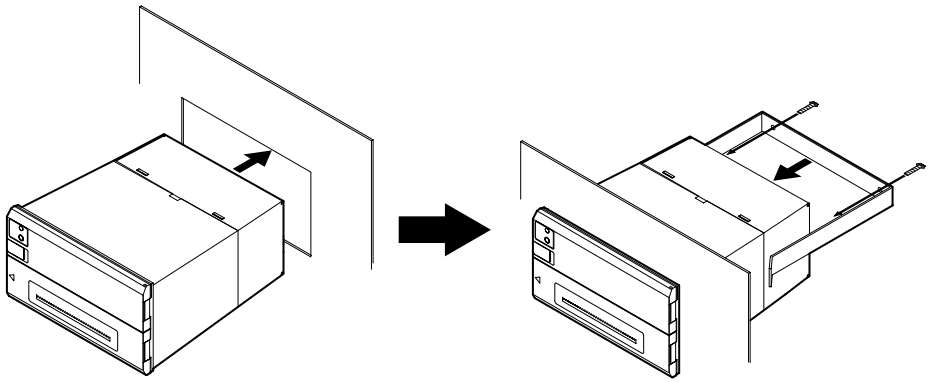

4.2 I/F Cable Connection

(1) Hold the protruding section at the rear of the printer cover and lift in the direction indicated.

(1) Confirm that themain power supply, etc. are OFF.

(2) Prepare power supply satisfying the power voltage and current capacity having been specified in the specifications.

(3) Firmly connect, in appropriate direction, the power supply and the main body through using the attached cable. The connector is at the bottom of the main body as shown in the drawing. This cable is integrated with the communication cable. The power cable is larger than the communication cable, which is colored in red and in orange for +5V use and in black for GND.

(4) Connect a power supply cable to the power supply. Pay attention not to connect power supply cable in reverse polar.

NOTE

Be sure to connect power cord and interface cable in correct polarity.
Connecting cable in reverse polarity may cause damage not only to the printer but also to the host.
Hold the connector when connecting or disconnecting the power cord of interface cable.

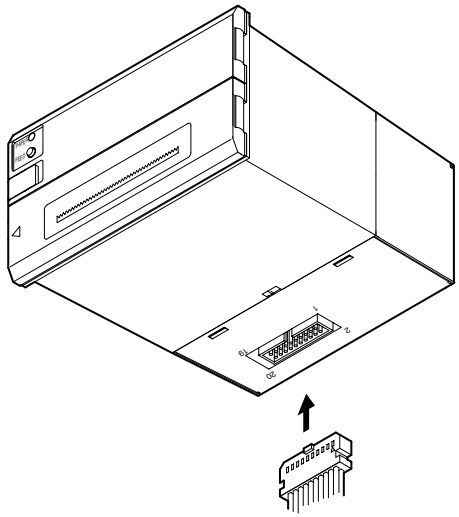

4.3 Panel Opening/Closing

4.3.1 Opening/Closing of Front Panel

(1) Applying your finger on the projection on the left side of the front panel, pull it forward when the lock is released. It opens by about 180° centering around the fixed axis.

(2) For closing, pressing the front panel, tightly close it until click sound is heard. Also, confirm, on closing, that paper is free of slackening.

4.3.2 Opening/Closing of Ribbon Cover

(1) When paper is out of the front cover, cut it off.

(2) Applying your finger on the dent on the left side of the ribbon cover, pull it forward.
It opens by about 180° centering around the fixed axis.

(3) For closing, pressing the ribbon cover, close it tightly.

NOTE

When closing the front cover, be sure not to catch paper. Otherwise, printing fault or printer malfunction may occur.

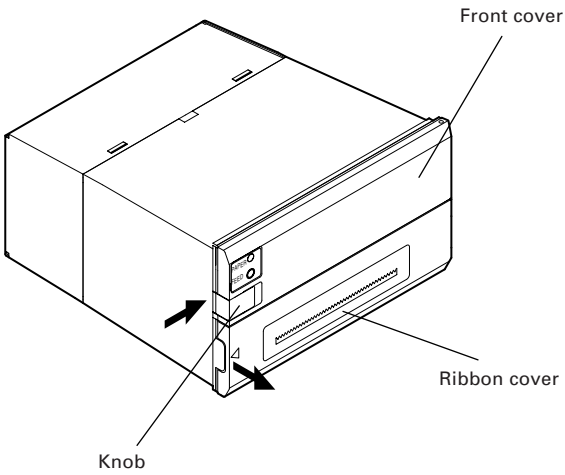

4.4 Paper Feeding

With the FEED switch pressed once, paper is fed by one line.
Paper is fed while it is continuously pressed.
To feed paper, do not pull it forcibly. Use the FEED switch.
During pressing the FEED switch, the data can not be received.
Printing does not start while the switch is pressed. Pressing this switch during printing does not feed paper.

NOTE

Do not use a pointed object, such as a pen, to press the FEED switch.
Never apply excessive force to the FEED switch.

4.5 Setting Ribbon Cassette

(1) Open the ribbon cover. Be sure to turn off power before opening it.

(2) In case the paper is out from front cover, cut the paper or remove this paper.

(3) Confirming the correct direction of a new ribbon cassette, insert ribbon between the printing head and the platen and press cassette down from the knob side.

(4) Turning the ribbon cassette knob in the arrowed direction, remove slack.

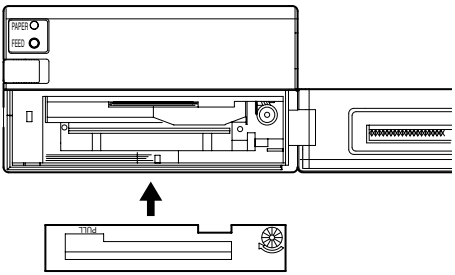

(5) On replacing a ribbon cassette, pull it out as holding the "PULL" part.

NOTE

- Leaving the printer for a long time with a ribbon cassette loaded may cause smudged printing. Continuous printing at low temperature may cause thin printing due to the characteristic of ink.
- Do not print without ribbon cassette loaded. Otherwise, print head may be damaged.
- Replace the ink ribbon before it is broken by overuse. Do not refill the ink ribbon.
- When setting or removing the ribbon cassette, do not apply excessive force to the ribbon cassette or printer. Otherwise, printer malfunction may occur.
- Use the specified ink ribbon.

4.6 Setting Paper

(1) Open the front panel.

(2) Use the paper with its end cut straight at right angle or obliquely as shown in the figure.

(3) Set the roll paper while turning the paper holder in the arrow direction and putting paper roll core onto the holder.

(4) Insert the end of print paper into the paper insertion slot of the printer.
When auto loading function is enabled, paper is loaded automatically.
When auto loading function is disabled, insert the paper into the insertion slot while pressing and holding the FEED button. Keep the FEED switch held until paper appears from the paper exit.

(5) Eliminating slack on the printing paper, close the front panel. Be sure not to catch paper.

(6) When replacing printing paper, remove the core with the paper holder turned in the arrow direction. Press the FEED switch to remove the paper remained. Do not pull the paper forcibly when removing paper.

(7) When setting print paper is completed, press the FEED switch once. The printer returns to data ready and print ready state.
Note that if "Auto clear after paper setting"is set, completing paper setting operation automatically enters the data ready and print ready state.

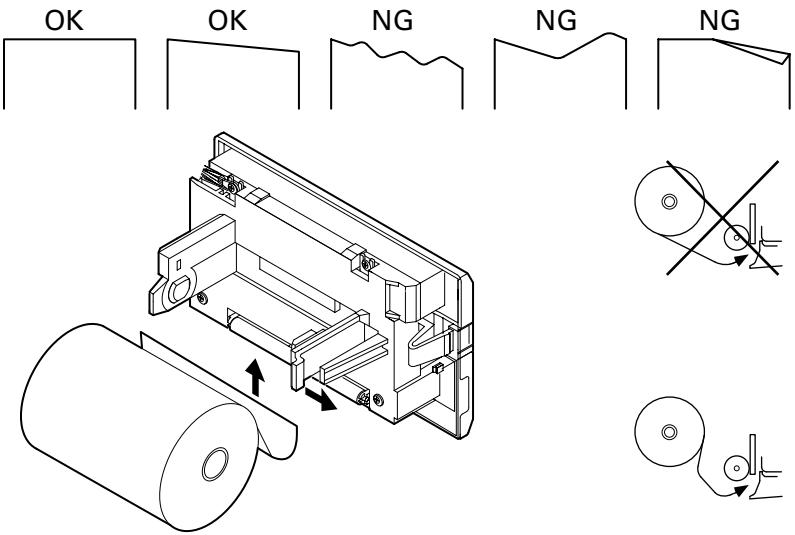

⚠NOTE

- Set the print paper in the correct direction.
- When closing the front panel, be sure not to catch paper. Otherwise, paper jam, etc. may occur.
- Do not start printing without print paper properly held in the paper holder; otherwise, paper jam or the like may occur.
- While replacing the paper, do not send data from the host.
- Do not pull the paper in reverse direction of paper feed. This may cause abnormality of print head.
- In case the paper is set at as skew angle, paper jam may occur. If paper jam occurs, turn off the power switch and pull out the jammed paper slowly straightforward in the paper feed direction.
- Note that if "Auto clear after paper setting"is set and data is present in the print buffer, print operation starts automatically after print paper is set.
- Do not use roll paper of ϕ50 mm or more. Otherwise, paper jam or the like may occur.

NOTES ON PAPER

Shape:
Use the roll paper with the beginning of winding (innermost end of the paper roll) treated as follows:

(1) No fold and well aligned to inside diameter.

(2) No flap

(3) Not pasted to the paper core (if any).

(4) No colored part facing PNE sensor (Otherwise, variations in PNE sensor detection may occur.)

Recommended paper:
One-ply paper..... 45 to 55kg / 1,000 sheets / 1091 x 788 mm

Paper roll diameter

(1) With core
Use paper core of f12 mm inner diameter and f18 mm outer diameter.
Using paper core of greater than f18 mm or cone type may have effect on the PNE sensor.

(2) Without core
Start winding for printing at the position of f12 mm or more. The PNE sensor starts detection of PNE (Paper Near End) around f20 mm. If you use a roll paper without core, keep the paper remainder in mind.
If the start of winding is f12 mm or more, print paper may flip flop in the printer and may affect PNE sensor detection.

4.7 Auto Loading Function

This printer is equipped with a function to automatically load paper.
When print paper is inserted into the insertion slot in accordance with "Setting Printing Paper" causes paper to be fed automatically by a specified amount.
If print paper is skewed or fed abnormally, remove it gently and insert the paper again.
If you do not want to use this function, set this function disabled by using a memory switch. (Paper insertion is available with the FEED switch.)
If "Auto clear after paper setting" is set, the printer enters the data ready and print ready state after completing paper setting. Note that printing starts automatically if print data is present in the receiving buffer.
If "Clear with FEED switch after paper setting" is set, press the FEED switch once after completing auto loading.
If paper removal is attempted or paper is not inserted correctly during auto loading, paper feed operation stops. Insert the print paper again.

NOTE

- Do not pull the print paper during auto loading.
- If print paper is not fed by auto loading, remove the print paper and then insert it again.
- Note the direction of the print paper setting.

4.8 Self-printing Function, Hexadecimal Printing Function

Turning the printer power on while pressing and holding the FEED switch causes the following state.
Before operating the FEED switch, confirm that the DIP switch (SW1) No. 4 at the back of the printer is set to OFF.

- Self-printing function
  Prints model name, version, initial setting state, etc.

- Hexadecimal printing function
  Prints all data sent from the host in hexadecimal code.
  This mode lasts till the printer is turned off.

(1) Self-printing function
Turn the printer power on with the FEED switch pressed and held.
Release the FEED switch in 3 seconds after printer power on, and self-printing starts. After self-printing, normal printing state is restored.

(2) Hexadecimal printing function
Turn the printer power on with the FEED switch pressed and held for approx. 6 seconds and then release the FEED switch. The printer prints "Hexadecimal Dump" and then stops.
The printer prints data sent from the host by converting it to hexadecimal code. If the data received last is less than one line, press the FEED switch to print the received data. Print data for one line differs depending on the specification (number of digits).

Example of Self-print:

```
CBM-920Type2
Test Print

F/W Ver  :1.00000
Prn Mode :CBM-920
Emulation:CBM-920
Interface:Parallel
Character:Normal
CR Mode  :Not Used

SW1 MemorySW
1234 0123456789ABCDE
00-0 8C0200100000000

 !" #$%&' ()*+ ,-
```

Example of Hexadecimal print:

```
Hexadecimal Dump

31 32 33 34 35 36 37 38   12345678
39 3A 3B 3C 3D 3E 3F 40   9*+,-./@
41 42 43 44 45 46 47 48   ABCDEFGH
49 4A 4B 4C 4D 4E 4F 50   IJKLMNOP
51 52 53 54 55 56 57 58   QRSTUVWX
```

4.9 Memory Switch Setting

<Memory Switch Initial Setting>

NO.	Item	Japan (920JPN)	International (920Intl)
0	International character selection	Japanese	U.S.A
1	Code page selection	920 emulation (Japan)	920 emulation (International)
2	Emulation selection	CBM920 emulation	
3	Ack timing *2	After clearing BUSY (After)	
	Communication error data processing *3	Replace with 7Fh (7Fh)	
4	Paper-near-end selection	Valid	
5	Power ON state	Online	
6	Busy signal clear timing *1	CBM-920	
7	Input buffer size	2k bytes	
8	PE output at PNE *2	Valid	
	Communication data bit length selection *3	8 bits	
9	I/F, LED state at PNE	I/F+LED	
A	BUSY at FEED switch ON	Invalid	
B	Auto loading	Valid (short)	
C	Clear after auto loading	FEED SW	
D	Supply voltage check	Only at power ON	
E	Paper lamp	CBM920 emulation	

*1: Effective only for parallel I/F (P model).
*2: Applicable to parallel I/F (P model).
*3: Applicable to serial I/F (R model).

Memory switch setting can be changed by a command or by manual operation.

a) Change by command
Memory switch can be changed by a command. For details, refer to “8. Print Control Function”.
When the printer receives the command, it outputs a BUSY signal and enters memory setting mode. After writing into memory switch, software resetting is carried out and the receive buffer/print buffer are cleared causing each set value to return to the initial value and then the contents of the memory switch(es) are reloaded.
Commands are set one by one. Use care when changing two or more set values.

b) Change by manual operation

Set the DIP switch (SW1) No. 4 at the back of the printer to ON. Turn the printer power on while pressing and holding the FEED switch.
The printer prints the information on the current memory switch setting and then enters the Change Setting mode.
In this case, the PAPER lamp and the POWER lamp blink alternatively at 1-second intervals and the BUSY signal is outputted.
Using the FEED switch, choose one of the options for each setting item.

Changing setting item

A total of 15 setting items are available.
The printer prints the contents of setting items and current set values on print paper.
Pressing the FEED switch short causes the setting item to move.
When all the setting items are changed, the re-setting state or writing (registering) to memory switch state is reached.
To change the value of setting item, press and hold the FEED switch for more than 1 second. Current set value is printed with a mark "?".

Changing options

When item to be selected in the setting items is specified, current option is printer with a mark "?".
When selecting an option, press the FEED switch short. Specified options are printed one by one. When the last option is reached, selection is returned to the first.
To decide the selection, press and hold the FEED switch for more than 1 second.
Setting options is restored to changing setting items.

Writing the setting items to memory switch (registration)

When the last setting item is selected after setting the options of necessary setting items, the following is printed.
"Short:Retry Long:Write"
Press the FEED switch for more than 1 second. The printer prints the setting status and writes the status of setting to the memory switch (registration).
After completion of writing, the printer prints a message and then stops.
After memory switch setting, return the DIP switch No. 4 to OFF.

NOTE

Before turning the printer power on again, return the DIP switch No. 4 to OFF. If the printer is operated normally with that switch set to ON, the printer prints the message.
When you press the FEED switch for more than 1 second, the PAPER lamp changes from blinking to lighting condition.
Even when transferring to memory setting mode, the printer detects paper end condition or the like. However, before transferring to this mode, be sure sufficient paper is present in the printer.

<Contents of Memory Switch Setting>

NO.	Setting items (Printout in the lower)	Options	Value*1	Printout of option	Factory setting
0	International character selection country For international character set, refer to International Character Code Table.	U.S.A France Germany England Denmark Sweden Italy Spain Japan Norway Denmark 2 Spain Latin America Korea	0 1 2 3 4 5 6 7 8 9 10(A) 11(B) 12(C) 13(D)	USA FRANCE GERMANY U.K. DENMARK SWEDEN ITALY SPAIN JAPAN NORWAY DENMARK2 SPAIN2 Ltn.Ame KOREA	●*2 ●*3
1	Code page selection Codepage For code page, refer to Character Code Table.	Code page 437 katakana Code page 858 Code page 860 Code page 863 Code page 865 Code page 852 Code page 866 Code page 857 WPC1252 Code page 864 Code page 869 920 Japan 920 International Blank code page	0 1 2 3 4 5 6 7 8 9 10(A) 11(B) 253(C) 254(D) 255(E)	CP-437 Katakana CP-858 CP-860 CP-863 CP-865 CP-852 CP-866 CP-857 Windows CP-864 CP-869 920Jpn 920Intl Space	 ●*3 ●*2
2	Emulation selection Emulation	CBM920 Emulation iDP3110 Emulation	0 1	CBM-920 iDP3110	●
3	ACK Timing ACK Timing *4	Before clearing BUSY Before and after clearing BUSY After clearing BUSY	0 1 2	Before Center After	 ●
3	Communication error data processing Comm Error *5	Ignored Replaced with 3Fh Replaced with 7Fh	0 1 2	Ignore 3Fh 7Fh	 ●
4	Paper-near-end selection PNE Sensor	Valid Invalid	0 1	Enable Disable	●
5	Power ON state P-ON Sel *6	Online Offine	0 1	Select Deselect	●
6	Busy signal clear timing Busy *7	Standard CBM-920	0 1	Standard CBM-920	 ●
7	Input buffer size Buffer	2k bytes 72bytes	0 1	2Kbytes 72bytes	●

NO.	Setting items (Printout in the lower)	Options	Value*1	Printout of option	Factory setting
8	PE output at PNE PNE Peout	Valid Invalid	0 1	Enable Disable	●
8	Communication data bit length selection Bit Length	8 bits 7 bits	0 1	8 bits 7 bits	●
9	I/F, LED state at PNE PNE Signal *8	I/F and LED I/F only LED only	0 1 2	I/F+LED I/F only LED only	●
A	BUSY at FEED switch ON FEED SW Busy	Invalid valid	0 1	Disable Enable	●
B	Auto loading AutoLoad	Short (Few lines) Long (Approx 2 times) Invalid	0 1 2	Short Long Disable	●
C	Clear after auto loading AL recover	FEED SW Auto	0 1	FEED SW Auto	●
D	Supply voltage check Power Check	At Power ON Always	0 1	PowerON Always	●
E	Paper lamp Paper LED	CBM-920 Emulation CBM-920II	0 1	CBM-920 CBM-920II	●

*1: Value in () is the one printed as the initial setting items in self-printing.
*2: Initial setting value of overseas specification (F model)
*3: Initial setting value of domestic specification (J model)
*4: Setting item of parallel I/F (P model)
*5: Setting item of serial I/F (R model)
*6: In the offline state, pressing the FEED switch once with power ON sets the online state.
*7: Only parallel I/F (P mode) functions
Standard: Clear after confirming the start of STB signal.
CBM-920: Clear after completion of storing data to the input buffer.
*8: Indicates that I/F outputs BUSY at the detection of PNE. LED indicates PAPER lamp.

For the setting of DIP switches, refer to “7. Setting DIP Switches”.

4.10 PNE, PE, Other errors

(1) Paper-near-end (PNE)
When the print paper becomes scarce, the printer detects paper-near-end. This error occurs when the PNE sensor detects paper-near-end consecutively for approx. 2 seconds. When the printer detects enough paper for more than 1 second, the paper-near-end is cleared automatically. The indication and signal status varies in accordance with the setting status of memory switches 5, 8 and 9.

(2) Paper-end (PE)
If the print paper runs out of paper, the printer detects paper-end. If the printer detects PE during printing, it stops printing. PE is cleared when new paper is set. The PAPER lamp lights (blinks) and issues BUSY and PE signals to the host.

(3) Mechanism error (Mechanism alarm)
This alarm is issued when the printer mechanism is locked by paper jam or the like during printing or paper feeding.
The printer outputs the BUSY and FAULT signals to the host. The PAPER lamp blinks depending in accordance with the status of memory switch setting.
After removing the error state, press the FEED switch to restore.
If the error state cannot be cleared, turn the printer power off and verify the error status.

(4) Memory error (RAM error)
This error is issued when error occurs in the memory built in the printer at the time of printer power on.
The PAPER lamp blinks and outputs BUSY and FAULT to the host.
Turn the printer power off and then turn the printer on. If error still occurs with the printer power on, this is an unrecoverable error. Contact your nearest CITIZEN SYSTEMS dealer.

(5) Memory switch error
This error is developed when any abnormality is detected in the setting of memory switch when the printer is powered on. This error is recovered by resetting the memory setting and turning the printer power on again.
If the error cannot be recovered even by resetting, turn the printer power off and contact your nearest CITIZEN SYSTEMS dealer.

(6) Voltage error
This error occurs when the printer detects abnormal supply voltage in mechanism driving system when the printer power is turned on or during printer operation. The PAPER lamp blinks and outputs BUSY and FAULT to the host. This is an unrecoverable error. Turn off the printer immediately.
This error occurs when the fuse for mechanism driving is blown.

For details of the lamp state and interface signal state at the occurrence of error, refer to the next page.
For serial interface model, read the BUSY signal as DTR signal.

4.11 Clearing Lamp Status, I/F signal status, error, etc.

Lamp status and I/F signal status in various states of the printer are as shown below. Error state may vary a little depending on the printer mode.
Note that the some indication and output status may vary depending on the setting of memory switch.

State	Memory switch	Return	PAPER lamp	POWER lamp	I/F signal line
RAM error	— — —	Impossibility			BUSY, FAULT
Memory switch error	— — —	— — —		Lights	None
Mechanism error	MSW-E:0	FEED switch	Turning off	Lights	BUSY, FAULT
	MSW-E:1	FEED switch	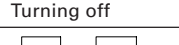	Lights	BUSY, FAULT
PNE detection*2	MSW-9:0	PNE clear	Lights	Lights	BUSY, PE *1
	MSW-9:1	PNE clear	Turning off	Lights	PE *1
	MSW-9:2	PNE clear	Lights	Lights	None
PE detection	MSW-E:0	PE clear	Lights	Lights	BUSY, PE
	MSW-E:1	PE clear		Lights	BUSY, PE
Voltage error	— — —	Impossibility	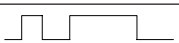	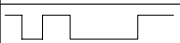	BUSY, FAULT
In auto loading	— — —	— — —	Lights	Lights	BUSY, PE
PE clear	MSW-C:0	FEED switch	Lights	Lights	BUSY
Pressing FEED switch	MSW-A:0	— — —	Turning off	Lights	None
	MSW-A:1	— — —	Turning off	Lights	BUSY
At power ON	MSW-5:1	FEED switch	Slow blinking	Lights	BUSY
Hexadecimal dump setting	— — —	— — —	Lights	Lights	BUSY
Memory switch setting	— — —	— — —	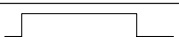	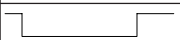	BUSY
*Item selection	— — —	— — —	Lights	Lights	BUSY

*1: Subject to memory switch No.8 setting.
*2: PNE does not function when memory switch No. 4 is disabled.

4.12 Special Functions

This printer allows following printing and setting by using “Back switch” located on the back of the printer.

(1) In case of normal printing operation
When the printer is ready for printing in normal operation, press and hold this switch for more than 3 seconds (PAPER lamp lights) and then release it. The printer prints the detailed status of memory switches currently set.
When pressing and holding this switch for more than 6 seconds and then releasing it (PAPER lamp goes off), the printer starts self-printing.

(2) In case of memory switch setting
When the printer is ready for selecting items in the state of transferring to memory switch setting mode, pressing and holding this switch for approx. 3 seconds or more and then releasing it results in transfer to the last item selection state (state of re-setting or selecting memory switch writing).
If this switch is pressed for approx. 6 seconds or more and then released, the memory switch is restored to the initial state. As the initial state is only set in the setting mode, writing to memory switch is necessary. If the FEED switch is kept pressed when this switch is released, the printer is initialized to domestic setting. If the FEED switch is not pressed, the printer is initialized to overseas setting.

[Printout of memory switch domestic setting]

```
Memory SW Information
0:Country      U.S.A.
1:Codepage     920Intl
2:Emulation    CBM-920
3:ACK Timing   After
4:PNE Sensor   Enable
5:P-ON Sel     Select
6:BUSY         CBM-920
7:Buffer       2Kbytes
8:PNE Peout    Enable
9:PNE signal   I/F+LED
A:FEEDSW BUSY  Disable
B:AutoLoad     Short
C:AL recover   FEED SW
D:Power Check  PowerON
E:Paper LED    CBM-920
```

5. PARALLEL INTERFACE

5.1 Specifications

(1) Data input system: 8 bit parallel (DATA 1-8).

(2) Control signal: $\overline{\text{ACK}}$, $\overline{\text{STB}}$, BUSY, PE, $\overline{\text{RESET}}$, $\overline{\text{FAULT}}$

(3) Power cable: +5V, GND and FG

(4) Compatible connector:
HIF3F-20PA-2.54DS(71) (Hirose Electric compatible)
HIF3B-20D-2.54R(C) (Hirose Electric compatible)

5.2 Connector Pin Assignment

Pin	Signal Name	Pin	Signal Name
1	$\overline{\text{STB}}$	11	BUSY
2	DATA 1	12	PE
3	DATA 2	13	$\overline{\text{FAULT}}$
4	DATA 3	14	$\overline{\text{RESET}}$
5	DATA 4	15	GND (For interface)
6	DATA 5	16	FRAME GND (FG)
7	DATA 6	17	+5V (For circuit control)
8	DATA 7	18	GND (For circuit control)
9	DATA 8	19	+5V (For mechanism drive)
10	$\overline{\text{ACK}}$	20	GND (For mechanism drive)

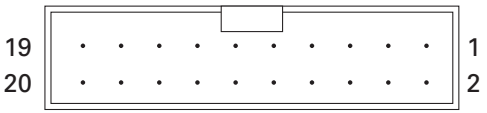

5.3 Description of Input/Output Signals

(1) Input signal
- DATA 1 to DATA 8 . . . 8 bit parallel signal (positive logic)
- $\overline{\text{STB}}$ . . . Strobe signal for reading out data (negative logic)
- RESET . . . Signal for resetting the entire unit (negative logic 4 ms or more)

(2) Output signal
- $\overline{\text{ACK}}$ . . . 8 bit data signal for requesting data. ACK is issued at the end of the BUSY signal (negative logic)
- BUSY . . . Signal indicating the printer is busy. Input new data when the signal is in "LOW" condition (positive logic)
- PE . . .Signal that shows form cutting (positive logic)
- FAULT. . . . Signal that shows that trouble like mechanism alarm etc. occurred

(3) Other
- GND . . . Ground commonly used in the circuit
- FRAME GND . . . Frame ground (case ground)

(4) Timing chart
Busy signal timing: Clear timing can be selected by the memory switch.
ACK signal timing: The following kinds of timing can be selected by the memory switch setting.

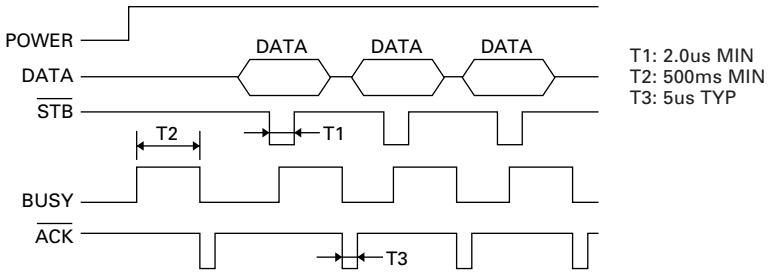

Busy signal timing: Clear timing can be selected by the memory switch.
ACK signal timing: The following kinds of timing can be selected by the memory switch setting.

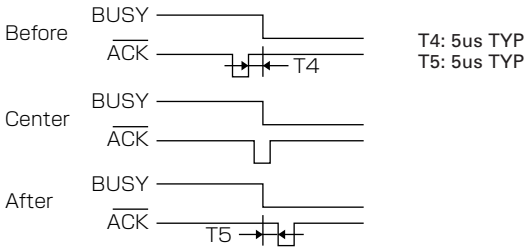

5.4 Electrical Characteristics

(1) Input signal level
The input except RESET are CMOS signal levels. As the input side is pulled up with a resistance of 10 kΩ, it can be used at TTL level.

CMOS Level	TTL Level
"HIGH" level: 4.0 V MIN	"HIGH" level: 2.4 V MIN
"LOW" level: 1.0 V MAX	"LOW" level: 0.4 V MAX

(2) Output signal level
All inputs are TTL level. As the input side is pulled up with a resistance of 10 kΩ, it can be used at TTL level.
"HIGH" level: 2.4 V MIN
"LOW" level: 0.4 V MAX

(3) I/O conditions

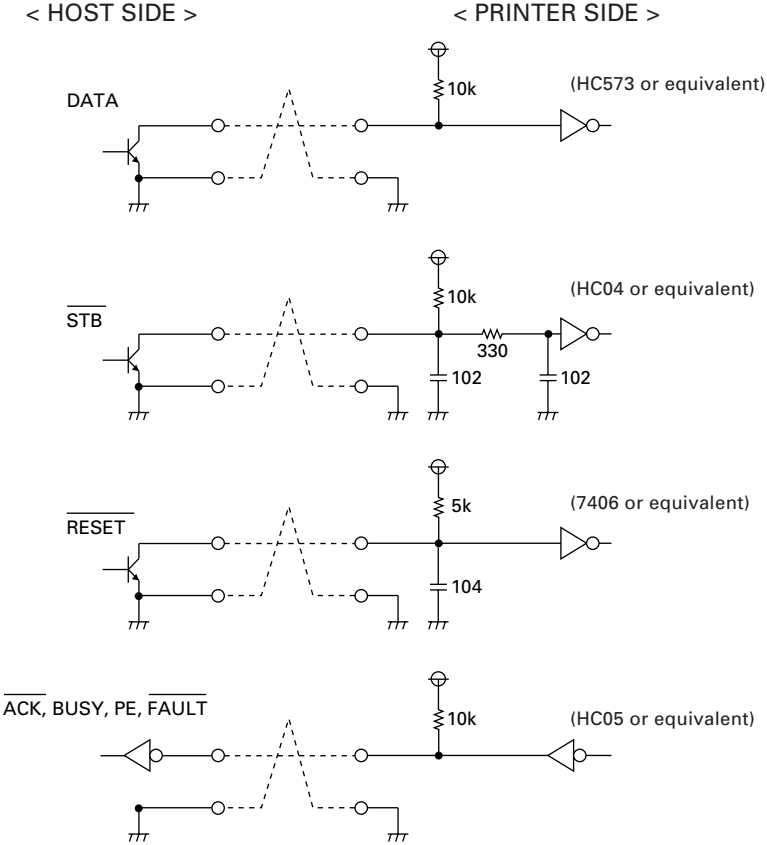

6. SERIAL INTERFACE

6.1 Specifications

(1) Synchronization: Asynchronous

(2) Baud rate
1200, 2400, 4800, 9600, 19200 Baud/sec (User selection)

(3) Word configuration
- Start bit: 1 bit
- Data bit: 7 bits or 8 bits (User selection)
- Parity bit: odd, even, no parity (User selection)
- Stop bit: 1 bit or more

(4) Data I/O signal
RxD, TxD (RE-232C)

(5) Control signal
DTR, PE, $\overline{\text{RESET}}$, $\overline{\text{FAULT}}$

(6) Signal polarity

RS-232C
- Mark = Logic "1" (–3 V to –12V)
- Space = Logic "0" (+3 V to +12 V)

TTL , CMOS
- H level = Logic "1"
- L level = Logic "0"

(7) Power cable
+5V, GND and FG

(8) Compatible connector:
HIF3F-20PA-2.54DS(71) (Hirose Electric compatible)
HIF3B-20D-2.54R(C) (Hirose Electric compatible)

6.2 Connector Pin Assignment

Pin	Signal Name	Pin	Signal Name
1 to 8	N.C (Unconnection)	15	GND (For interface)
9	RxD	16	FRAME GND (FG)
10	TxD	17	+5V (For circuit control)
11	DTR	18	GND (For circuit control)
12	PE	19	+5V (For mechanism drive)
13	$\overline{\text{FAULT}}$	20	GND (For mechanism drive)
14	$\overline{\text{RESET}}$		

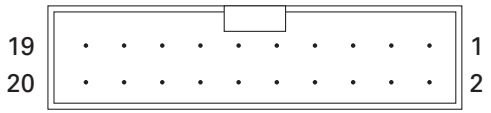

6.3 Description of Input/Output Signal

(1) Signal input to printer (RS-232C)
RxD(RECEIVE DATA) . . . Serial receive data signal

(2) Signal input to printer (TTL,CMOS)
$\overline{\text{RESET}}$. . . Signal for resetting the whole printer (negative logic) 4 ms or more

(3) Signal output from printer (RS-232C)
TxD(TRANSMIT DATA). . .Serial transmit data signal
DTR(DATA TERMINAL READY)
When this signal is Ready (Space), send data or command from the host. If transmission is made when this signal is Busy (Mark), overrun error occurs. If the signal is ready even if the printer is in printing operation, data can be sent to the input buffer.
At the time of printer power on, test printing, reset occurrence, and memory switch setting, this signal is Busy.

(4) Signal output from printer (TTL,CMOS)
PE. . . Signal indicating end of paper (positive logic)
FAULT. . . Signal indicating occurrence of failure such as mechanism alarm (negative logic)

(5) Data configuration

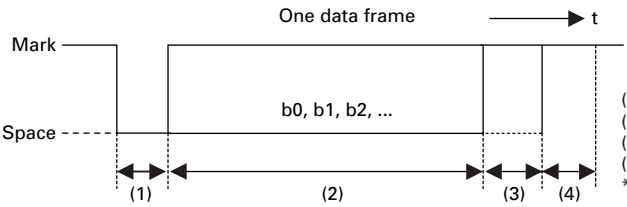

(1) Start bit (1 bit)
(2) Data bit (7/8 bits)
(3) Parity bit (0/1 bit)
(4) Stop bit (more than 1 bit)
* Parity bit may or may not be present.

6.4 Electrical Characteristics

(1) RS-232C I/O signals (RxD/TxD/DTR)

- Input (RxD), Output (TxD)
  Mark = (–8 V): Stop bit
  Space = (+8 V): Start bit
- Output (DTR)
  Mark = (–8 V): For Busy
  Space = (+8 V): For Ready

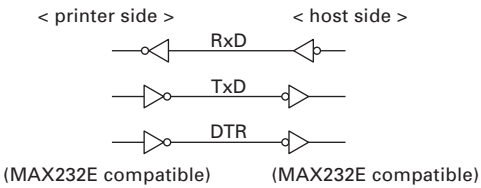

(2) TTL circuit (PE/RESET/FAULT)
Input (RESET)
The input signal level is TTL level.
"HIGH" level: 2.4 V MIN
"LOW" level: 0.4 V MAX

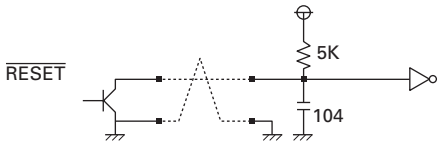

(7406 compatible)

Output (RE/FAULT)
The output signal level is TTL level.
"HIGH" level: 2.4 V MIN
"LOW" level: 0.4 V MAX

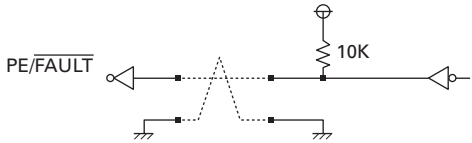

(HC05 compatible)

6.5 Error Detection

This printer detects the following communication errors in the data communication of serial interface. When any error occurs, the printer converts (or may ignore in some case) the data at the occurrence of the error to the characters set by the memory switch and then prints the characters.

- Parity error
  Parity error occurs when parity check is specified and parity is not observed in the even and odd parity checks.

- Framing error
  When space state detected on detection of stop bit.

- Overrun error
  This error occurs when next data is transferred to receiving buffer though input buffer is full of data.

RECEIVING CONTROL AND BUFFERING

This equipment controls, on receipt of print data, receiving (DTR Control) in one-word unit. If the host disregards DTR and carries out data transmission at this time, overrun of receiving data may be resulted. This state should be avoided on the host's responsibility. (The data discharging type host cannot follow this.)

7. DIP SWITCH (SW1) SETTING

7.1 DIP Switch Position

DIP switch (SW1) is located at the back of the printer as shown in the figure below. The polarity and part of the function of the switch differs depending on the interface. For memory switch setting, refer to “4.9 Setting Memory Switches”.

NOTE

Before setting, turn the printer power off.
Do not use edged object, such as a pen, to change the switch.

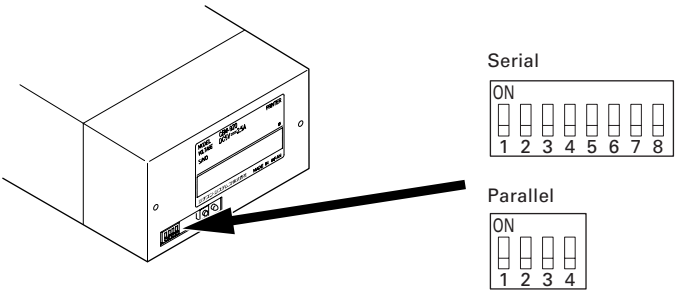

7.2 Parallel Interface Type

Switch No.	Function	OFF	ON	Factory Setting
1	Character direction	Normal	Inverted	OFF
2 (920)*	CR command	Ignore CR	CR + LF	OFF
2 (3110)*	CR command	CR	LF	OFF
3	RESET in	Disable	Enable	ON
4	Memory switch	Disable Setting	Enable Setting	OFF

*: Difference may occur in accordance with the emulation set by the memory switch.

After setting DIP switch No. 4 to ON, turning the printer power on with the SEL switch pressed and held causes the printer enter the Manual memory switch setting mode. After manual setting mode, be sure to set this switch to OFF.

7.3 Serial Interface Type

Switch No.	Function	OFF	ON	Factory Setting
1	Character direction	Normal	Inverted	OFF
2 (920)*	CR command	Ignore CR	CR + LF	OFF
2 (3110)	CR command	—	—	OFF
3	Reset in	Disable	Enable	ON
4	Memory switch	Disable Setting	Enable Setting	OFF
5	Transmission rate and parity	The following reference		OFF
6				OFF
7				OFF
8				OFF

* Difference may occur in accordance with the emulation set by the memory switch.

Set DIP switch No. 4 to ON. Then turn the printer power on while pressing and holding the FEED switch. The printer enters the manual memory switch setting mode. After manual setting mode, be sure to set this switch to Off.

Baud rate and parity selection

Switch No.				Baud Rate (bps)	Parity	Factory Setting
8	7	6	5			
OFF	OFF	OFF	OFF	4800	None	O
OFF	OFF	OFF	ON	1200	None	—
OFF	OFF	ON	OFF	2400	None	—
OFF	OFF	ON	ON	4800	None	—
OFF	ON	OFF	OFF	9600	None	—
OFF	ON	OFF	ON	19200	None	—
OFF	ON	ON	OFF	1200	Odd	—
OFF	ON	ON	ON	2400	Odd	—
ON	OFF	OFF	OFF	4800	Odd	—
ON	OFF	OFF	ON	9600	Odd	—
ON	OFF	ON	OFF	19200	Odd	—
ON	OFF	ON	ON	1200	Even	—
ON	ON	OFF	OFF	2400	Even	—
ON	ON	OFF	ON	4800	Even	—
ON	ON	ON	OFF	9600	Even	—
ON	ON	ON	ON	19200	Even	—

8. PRINT CONTROL FUNCTION

8.1 List of Control Codes

Symbol	Code (Hexadecimal)	Function	Emulation		No.
			CBM920	iDP3110	
LF	0A	Line feed after print	O*1	O*1	1
CR	0D	Carriage return and line feed	O*1	O*1	1
SI	0F	Normal size character	O	O	2
SO	0E	Double width character	O	O	2
RS	1E	Double width character	O	—	2
US	1F	Normal size character	O	—	2
CAN	18	Cancel data	O	—	3
DC2	12	Inverted character	O	—	4
DC1	11	Initialize	O	—	5
ESC + “B”	1B, 42	Feed paper continuously	O	O	6
ESC + “R”	1B, 52	Select international character	O	O	7
ESC + “t”	1B, 74	Select code page	O	O	8
ESC + “/”	1B, 2F	Register sentence	O	—	9
ESC + “! ”	1B, 21	Print registered characters	O	—	10
ESC + “%”	1B, 25	Enable/Disable registered characters	O*2	O*2	11
ESC + “&”	1B, 26	Register user-defined character	O*3	O*3	12
ESC + “K”	1B, 4B	Print bit image	O	O	13
FS + “W”	1C, 57, 1	Double height and width character / clear	O	—	14
ESC + “A”	1B, 41	Set line spacing	—	O	15
DC4	14	Clear double width character	—	O	2
DC3	13	Power down function	O*4	O*4	16
DC2	12	Power down function	—	O	16
ESC + “) ”	1B, 29,	Change memory switch	O	O	17

*1: Invalid in some case. Refer to the descriptions for “LF” and “CR”
*2: Invalid in some case. Refer to the descriptions for “Enable/Disable registered characters”.
*3: Function differs by the number of printable columns (specification). Refer to the descriptions for “Register user-defined character”.
*4: Different in function. Refer to the descriptions for “Power down function”.

8.2 Control Code Details

(1) Command for Line Feed After Printing (CR/LF)

By entering CR (0DH)/LF (0AH) codes, data in the print buffer is printed followed by a line feed. Without data in the print buffer, only a line feed is performed. This command is ignored just after buffer full in case of 920 emulation.
CR and LF are valid in the following conditions.

CBM-920 Emulation

	SW1 Switch No.1	
	OFF	ON
Serial	LF only	CR and LF
Parallel	LF only	CR and LF

iDP3110 Emulation

	SW2 Switch No.2	
	OFF	ON
Serial	CR only	LF only
Parallel	LF only	CR only

(2) Specify/Clear double-width character (SI, SO, US, RS, and DC4) command

SI/SO codes function in the same manner as US/RS as long as 8-bit data are assigned (serial communication data bit length), which, however, are divided, under 7-bit assignment, into SI (20H~7FH characters) print assignment and SO (A0H~FFH characters) print assignment functions.

1. Standard letter assignment (SO/RS) command:
With SI (0FH)/US (1FH) codes input, lateral enlargement is cancelled and the data following are printed in standard letters. This command can cancel only lateral enlargement, which dose not apply to ×4 enlargement.

2. Laterally enlarged letter assignment (SO/RS) command:
With SO (0EH)/RS (1EH) codes input in any columns, the data following are printed in prints enlarged double in width.
Although standard and enlarged letters can be mixed within one line, automatic (buffer-full) printing takes place when the number of columns reaches 24 (or 40) counted in standard letters. With 920 emulation, laterally enlarged letter assignment is cleared by printing after line feed, followed by SI, US, and DC1. With 3110 emulation, it is cleared by printing after line feed by LF and CR, followed by SI, US, and DC4.

[Example of receive data (For 24-column model)]

SO	1234567890	CR				
SO	123	SI	ABCD	CR		
SO	123	SI	ABCD	SO	12	CR
SO	SO	12345678901B				

[Results of Printing]

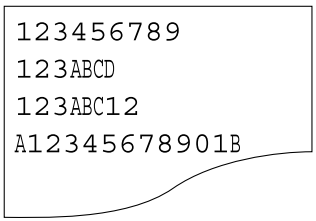

(3) Data Cancel (CAN) Command

With CAN (18H) code input, print data held within the line before input of the CAN code are all cancelled.

[Example of print data]

SO	123456	CAN	ABC	CR

[Results of Printing]

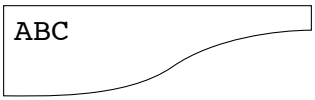

* As data "123456" are cancelled without the command "SO" cancelled, "ABC" is printed in lateral enlargement.

(4) Inverted Letter Assignment (DC2) Command

When data are input with DC2 (12H) attached at the beginning of a line (invalid when attached to any other place), data following are all printed in inverted letters. To cancel this, input either DC2 again or DC1 (initial setting.)

(5) Initial Setting (DC1) Command

With DC1 (11H) input, various conditions set after power supply are cancelled and the state as at supply of power is restored.
Content of the input buffer, however, is held unchanged.

(6) Continuous Paper Feed Assignment (ESC + "B") Command

With ESC (1BH) +"B" (42H) + n code input, continuous paper feed at n-dot line is executed.
However, n allows continuous paper feed to be executed at even-numbered dot line in the range of $4 \leq n \leq 255$. If n is specified otherwise, this command is cancelled.
When this command is entered, print data, if any, in the input buffer is printed. Print line (10-dot line) is included in the amount of line feed "n"; therefore, $4 \leq n \leq 9$ provides a line space of "0".

(7) International Character Select (ESC + "R") Command

By entering the code ESC (1BH) + "R" (52H) + n, characters input hereafter are set to the characters for the following countries.
With n other than those specified, the set value for the U.S. is assigned.

n	Country	n	Country	n	Country
0	U.S.A. (USA)	5	Sweden (SWE)	10	Denmark 2 (DEM 2)
1	France (FRA)	6	Italy (ITA)	11	Spain 2 (SPN 2)
2	Germany (GER)	7	Spain (SPA)	12	Latin America ( )
3	U.K. (U.K)	8	Japan (JPN)	13	Korea (KOR)
4	Denmark (DEM)	9	Norway (NOR)		

Note : International character set at printer power on and after reset signal input differs depending on the status of memory switch setting.

(8) Codepage Select (ESC + "t") Command

By the entry of ESC (1BH) + "t" (74H) + n code, the follwing character code table can be selected. When n is other than specified, it is set to code page CP437.

n	Character Code Table	n	Character Code Table
0	CP437 (USA,Std-Europe)	8	CP857 (Turkish)
1	Katakana	9	WPC1252 (Win. Latin1)
2	CP858 (Multilingual)	10	CP864 (Arabic)
3	CP860 (Portuguese)	11	CP869 (Greek)
4	CP863 (Canadian-French)		
5	CP865 (Nordic)	253	CBM-920 Emulation (Japan)
6	CP852 (Eastern Europe)	254	CBM-920 Emulation (International)
7	CP866 (Russian)	255	Blank page

Note : Code page at printer power on and after reset signal input differs depending on the status of memory switch setting.
Factory setting for "F" model of character set in model category is CBM-920 overseas compatible and that for "J" model is CBM-920 domestic compatible.

(9) Sentence Registration (ESC + "/") Command

With input of ESC (1BH) + "/" (2FH) + n + 'registered' + CR (0DH) / LF (0AH) code, 24 (40)-bytes data following n are registered. Set a numeral of 1~8 to n.
With any other numeral having been set, data following is regarded as print data, where no registration takes place and printing conducted.
Data cannot exceed one line and must be ended with CR (0DH) or LF (0AH).
To register a statement exceeding one line, the statement up to 24 (40) bytes is registered and the data following is printed out as print data.
The ESC command cannot be registered.
The registered data is cleared when the printer is turned off.

(10) Registered Sentence Printing (ESC + "!") Command

With ESC (1BH) + "!" (21H) + n code input, the statement already registered in the numeral assigned to n is printed.
Assign, to n, a numeral of 1 to 8. With any other numeral having been set, no execution takes place.

Note 1: As much as 24 (40) bytes of data can be registered. In case that 24 (40) columns are exceeded on printing (because of enlarged or ×4 letters having been assigned, etc.), printing is conducted up to 24 (40)th column and the columns overflowed are printed in the next line. Be sure to make registration in consideration of printing results.

Note 2: When double height and width character printing or inverted character printing is executed in registered sentence printing, this setting is active even after returning to normal printing unless that setting is cancelled.

[Application Example]

ESC	/	1	This is a pen	CR

Registered in 1.

ESC	/	9	It this a pen ?	CR

No registration made with 9.

ESC	/	1	Is this a pen	CR

Overwritten on sentence registered initially in 1.

ESC	!	1

Printing of sentence registered in 1.

[Registered State]

1	It is a pen
2	
3	
4	
5	
6	
7	
8	

[Printing Result]

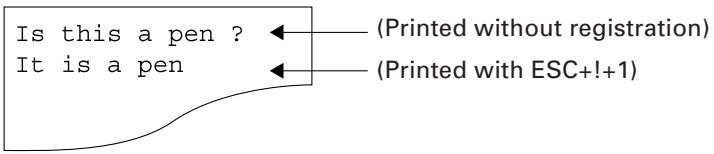

(11) Registered Letter Valid/Invalid (ESC + "%") Command

Whether a registered pattern is valid or invalid is set with ESC (1BH) + "%" (25H) + n code being input.

n = 1 (01H): Registered pattern to be made valid.
(Addresses for which no registration change has been conducted are taken as inside fixed characters.)
n = 0 (00H): Registered pattern to be made invalid.
(Taken as inside fixed character sets.)

With CBM-920 emulation 40-digit version, to use the registered characters, it is necessary to set the registered characters to be valid using this command. With iDP3110 emulation and CBM-920 emulation 24-digit version, the registered characters are valid at the registration of the user-defined characters without setting the registered characters to be valid.
To reset to the state where inside fixed characters are usable while registered characters are valid, it is necessary to disable the registered characters. Command for setting to invalid operates regardless of the emulation or number of digits.

Registered Characters Enable/Disable Command	Set to Valid	Set to Invalid
CBM-920 Emulation (40 digits)	O	O
CBM-920 Emulation (24 digits)	×	O
iDP3110 Emulation (40 digits)	×	O
iDP3110 Emulation (24 digits)	×	O

O: Operation enabled by the Valid/Invalid command of registered characters.
×: As the registered characters are valid by the Register User-defined Character command, it is not necessary to set the registered characters to be valid.

(12) Character Registration (ESC + "&") Command

1. For 24-column model (ESC + "&" + A1 + A2)
Individual patterns can be registered by entering the code ESC (1BH) + "&" (26H) + A1 + A2, then entering the pattern data.
A maximum of 224 characters can be registered, and any address in the range of 20H to FFH can be used for the registration. However, if a new pattern is registered in an address already in use, existing data is cleared and the newly entered data becomes valid.

[Address setting]
Specified address is matched to the character code and can be accessed likewise to the stored fixed character record. If a fixed character is defined in the specified address, the fixed character becomes invalid.
A1 signifies the starting address for the registrations, A2 is the ending address. When A1<A2 or (A2-A1)>7 is specified, no registration occurs and data following is treated as print data.

[Method of data transmission]

1) Single character registration

Select the address to be defined (character code) from among 20H to FFH and designate is as A1. When registering a single character, starting and ending addresses match each other. That is, A1=A2.

<Example>

A 6 × 6 dot matrix full dot pattern is to be registered in address 41H (code for the fixed character "A". (Numerals are hexadecimal.)

ESC + "&" + A1 + A2 + "Pattern data (6 bytes)"

1B 36 41 41 FF FF FF FF FF FF

In the successive controls, a 6 × 8 dot matrix full dot is output whenever the character code 41H is specified. (Character "A" cannot be accessed.)

2) Multiple character registration

By repeating the single character registration, a maximum of 8 characters can be registered. When defining multiple characters in a successive address (character code), register pattern data for a maximum of 8 characters by designation A1 as the starting address and A2 as the ending address.

((A1-A2)+1)x6 bytes are required for pattern data.

Note: A1 < A2, A2 – A1 ≤ 7

[Pattern data configuration]

Pattern data to be registered must consist of 6 bytes per character. That is, pattern data configured by a 6 × 8 dot matrix is broken up into 6 vertically positioned units each of which is represented by 1 byte of data. All together, 6 bytes of data are transmitted.

<Example> When transmitting the following data:

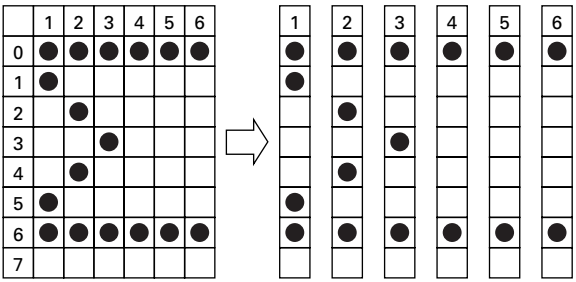

[Printing of registered letters]

To print registered character, in the same manner as printing other fixed characters, use the commands (CR, LF, ESC + B + n).

2. **For 40-column model**

In CBM-920 emulation (ESC + "&" + C1 + A1 + A2)

In iDP3110 emulation (ESC + "&" + A1 + A2)

With ESC (1BH) + "&" (26H) + {C1} + A1 + A2 code and the pattern data following input, a pattern is registered. Only CBM-920 emulation is specified for { }. Up to 224 characters can be registered into addresses from 20H to FFH. When the same pattern data is registered in the same address, data registered before is cleared and the new data becomes valid.

[Recognition of use of upper most bit]

For recognition of use or non-use of the uppermost bit by a character to be registered, set data to Parameter C1.

C1=0 (00H): Uppermost bit not used.

Other than C1=0: Uppermost bit used.

If 0 is set to this parameter regardless of whether most significant bit is specified, character as imaged cannot be registered.

[Setting of addresses]

A1 : Registration starting address (20H~FFH)

A2 : Registration ending address (20H~FFH)

[Pattern data configuration]

Pattern data to be registered must consist of 9 bytes per character. That is, pattern data configured by 9 × 8 dot matrix is broken up into 9 vertically each of which is represented by 1 byte of data. All together, 9 bytes of data are transmitted.

In case of iDP3110 emulation, blank data is automatically assigned to the 8th and 9th lines and pattern data consisting of 7 bytes is transferred.

<Example> When transmitting the following pattern data:

In CBM-920 emulation

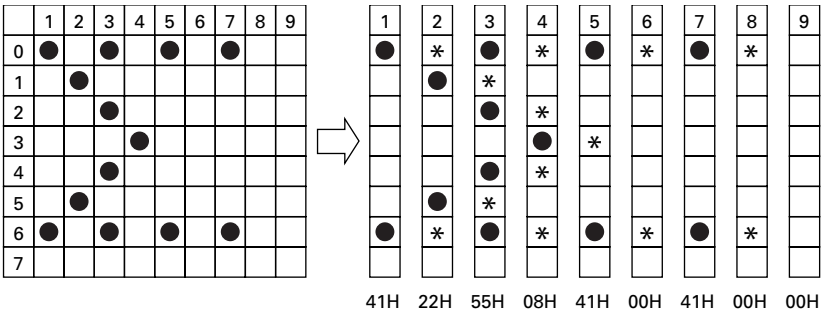

In iDP3110 emulation

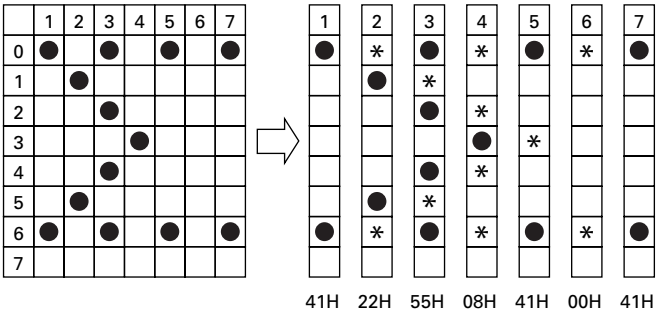

As the 40-column model is of half-dot printing system, continuous dots cannot be arranged in the printing direction (lateral direction). Therefore, even if any pattern is specified at point "*" at the right of point "●" above, it cannot be registered as a pattern.
In case of CBM-920 emulation, when data is printed with print data arranged on the 9th line, some effect may occur in the print pattern of the next print character.

In case of CBM-920 emulation, registering two-character data and configuring one double-width character is available.

<Example> When registering a Japanese character "玉" by using two characters 41H and 42H

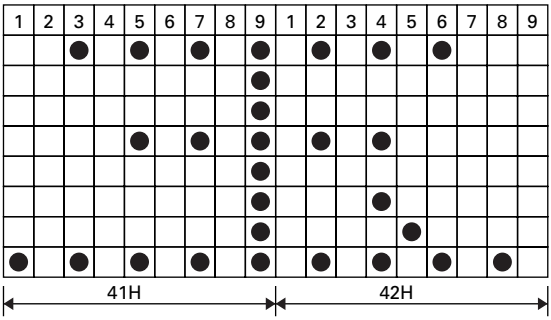

Following ESC + & + 01 (Note) + 41H + 42H
sending data 80H, 00H, 81H, 00H, 89H, 00H, 89H, 00H, FFH
00H, 89H, 00H, A9H, 40H, 81H, 00H, 80H, 00H
allows "玉" to be registered at 41H and 42H.

[Printing registered character]
To print a registered character, executing Activate Registered Character command may be required in some case. If you want to return to the internal characters, it is necessary to disable the registered characters.

(13) Bit Image Printing (ESC +"K") Command

With ESC (1BH) + K (4BH) + n1 + n2 + n3 code being input, conversion from Text mode into Bit Image mode takes place. The n1/n2/n3 assigns amount of transmission of bit image data which follows these. Where, n1 represents the no. of bytes in lateral direction and n2 (lowermost)/n3 (uppermost) represent the no. of dot lines in vertical direction.

[Relations between data and print-out]

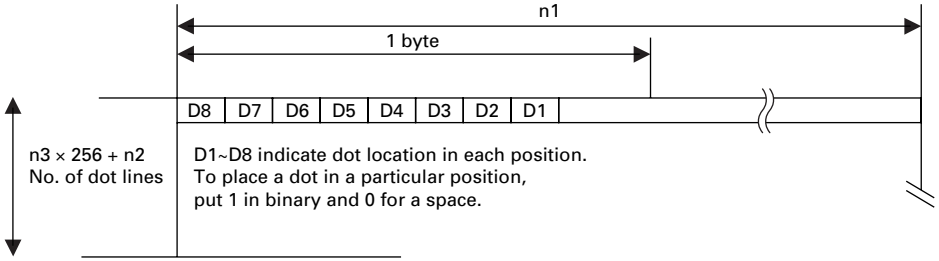

[Parameter assignable range]

Model	n1	n2	n3
24 columns	1~18	0~255	0~1
40 columns	1~23	0~255	0~1

In case that assignment has been made out of the assignable range or n2 = n3 = 0 has been assigned, Bit Image mode is cancelled and Text mode starts.
On completion of receiving 4-dot-line data or on completion of receiving n1/n2/n3 assigned data, this printer starts printing with insufficient data treated as spaces.

Note 1: With n1 = 23 having been assigned in 40-column model, 4 dots from the lowermost column (LSC-DOT) are made invalid. This is because the printing position in one line equals 180 dots.

Note 2: On termination of bit image printing, Text mode is reinstated.

(14) x4 Enlarged Letter Assignment / Cancel (FS + "W") Command

Specifies/clears double-height, double-width character by the entry of FS (1CH) + "W" (57H) + n code. If double-height, double-width character is specified, character data following this code is printed enlarged by 2 times both vertically and horizontally.

n= (00H) : Clears double-height, double-width character.
n= (01H) : Specifies double-height, double-width character.

Note 1: Although standard and laterally enlarged letters can coexist in one line, automatic (buffer-full) printing takes place on reaching to 24th (40th) column counted in standard characters.

Note 2: With x4 enlargement and double-width having been assigned, x4 enlargement has priority.

[Receiving Data]

FS	W	1	123456789	CR

FS	W	0	ABC	FS	W	1	123	CR

FS	W	1	A	FS	W	1	12345678901B

The last letter, although in ×4 assignment, is printed in standard letter since it being in the 24th column.
(For 40 column model, this applies to the 40th column.)

[Results of Printing]

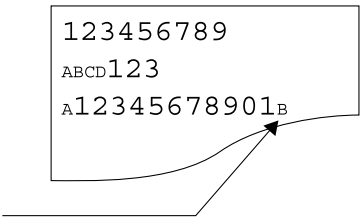

(15) Set Line Spacing (ESC + "A") Command

Sets a line space of "n" dot line by the entry of ESC (1BH) + "A" (41H) + n code. Initial setting is 2-dot line space.
Here, n is an even number in the range of 0 £ n £ 255.

Note: When an odd number is set to n, a line space of n-1 dots is specified. When n=0 or 1 is specified, continuous printing is permitted.

(16) Power Down Function (DC2, DC3) Only when 3110 emulation is selected

1. **CBM-920 emulation**

When the DC3 (13H) code is entered, the POWER lamp on the back of the printer goes off.
In other case, normal operating condition is maintained.
If paper-end, mechanism error, or the like occurs, the POWER lamp lights/blinks correspondingly and returns to normal indication.
The DC2 (12H) code is assigned to the command with another meaning.

2. iDP3110 emulation

In order to reduce power consumption when printer is not in operation, two power down modes triggered by the codes DC2 (12H) and DC3 (13H) are available with this printer.
When the printer receives DC2 (12H) or DC3 (13H), it enters the power down mode after all data previously received is printed out.
To exit the power down mode, re-enter the printer power or apply the "LOW" signal to the RESET terminal for more than 4 ms.

(a) DC2 (12H)
The printer enters the power down mode when DC3 (13H) code is entered. In this mode, the oscillator does not stop oscillation.

(b) DC3 (13H)
The printer enters the power down mode when DC2 (12H) code is entered. Operation of the oscillator is terminated, reducing the power consumption to less than that of the DC2 power down mode.

(17) Change Memory Switch (ESC + ")") Command

By the entry of the ESC(1BH)+ ")"(29H)+55H+n1+n2+AAH code, contents of memory switch shown in the table below can be changed.
When receiving this code, the printer enters the BUSY state and writes specified data (value) to the memory switch.
In this case, the printer performs reset operation. Here, the input buffer/print buffer is cleared, all set values are restored to the initial value, and the contents of memory switch are read again.
This command cannot be executed consecutively. When two or more memory settings are changed, set the value one by one.

NOTE

- If the parameter value is other than specified, writing to memory switch is not carried out.
- If the first byte and the fourth byte of parameter is other than specified code, writing to memory switch is not carried out.
- In case of serial interface, communication bit length must be set to 8 bits. When set to other than 8 bits, the communication bit length must be set to 8 bits by manual setting or the like.

* For manual setting, refer to "4.9 Setting Memory Switch".

Setting range of parameters n1 and n2 is as shown below.

n1	Function	n2	Content of Setting
0	Select international character set	0~13	See International Character Code Table.
1	Select code page.	0~11, 253, 254, 255	See Character Code Table Select Command.
2	Select emulation	0	CBM-920 Emulation
		1	iDP3110 Emulation
3	ACK timing	0	Before clearing BUSY
	(When it is a parallel I/F model)	1	Before and after clearing BUSY
		2	After clearing BUSY
	Communication error data processing	0	Valid
	(When it is cereal I/F model.)	1	Replace with 3Fh
		2	Replace with 7Fh
4	Paper-near-end (PNE) function	0	Valid
		1	Invalid
5	Power ON state	0	Online
		1	Offline
6	Busy signal clear timing	0	Standard
	(The function is not provided in cereal I/F model.)	1	CBM-920 Emulation
7	Input buffer Size	0	2k bytes
		1	72 bytes
8	PE output at PNE	0	Valid
	(When it is a parallel I/F model)	1	Inalid
	Communication data bit length selection	0	8 bits
	(When it is cereal I/F model.)	1	7 bits
9	I/F, LED state at PNE	0	I/F+LED
	(I/F shows the BUSY signal and	1	I/F only
	LED shows the Paper lamp.)	2	LED only
10	BUSY at FEED switch ON	0	Valid
	(When it is a parallel I/F model)	1	Inalid
11	Auto loading	0	Short
	(When it is a parallel I/F model)	1	Long (Approx 2 times)
		2	Invalid
12	Clear after auto loading	0	FEED SW
		1	Auto
13	Supply voltage check	0	At Power ON
		1	Always
14	Paper lamp	0	CBM-920 Emulation
		1	CBM-920II

9. CHARACTER CODE TABLE

9.1 Code page table

(1) ASCII

	0	1	2	3	4	5	6	7
0	NUL	DLE	SP	0	@	P	‘	p
1		XON	!	1	A	Q	a	q
2			"	2	B	R	b	r
3		XOF	#	3	C	S	c	s
4	EOT	DC4	$	4	D	T	d	t
5	ENQ		%	5	E	U	e	u
6			&	6	F	V	f	v
7			‘	7	G	W	g	w
8		CAN	(	8	H	X	h	x
9	HT		)	9	I	Y	i	y
A	LF		*	:	J	Z	j	z
B		ESC	+	;	K	[	k	{
C	FF	FS	、	<	L	＼	l	|
D	CR	GS	−	=	M	]	m	}
E			.	>	N	^	n	~
F			／	?	O	_	o	

(2) CBM-920 Emulation (International)

	8	9	A	B	C	D	E	F
0	▁	┴	€					
1	▂	┬						
2	▃	┤						
3	▄	├						
4	▅	─						
5	▆	┼						
6	▇	‖						
7	▇	▕						
8	▕	┌						
9	▌	┐						
A	▌	└						
B	▌	┘						
C	▌	╭						
D	▌	╮						
E	▌	╰						
F	┼	╯						

(3) CBM-920 Emulation (Japan)

	8	9	A	B	C	D	E	F
0	▁	┴	€	￣	タ	ミ	円	
1	▂	┬	°	ア	チ	ム	年	
2	▃	┤	｢	イ	ツ	メ	月	€
3	▄	├	｣	ウ	テ	モ	日	
4	▅	─	、	エ	ト	ヤ		
5	▆	┼	・	オ	ナ	ユ		
6	▇	‖	ヲ	カ	ニ	ヨ		
7	▇	▕	ァ	キ	ヌ	ラ		
8	▕	┌	ィ	ク	ネ	リ		
9	▌	┐	ゥ	ケ	ノ	ル		
A	▌	└	ェ	コ	ハ	レ		
B	▌	┘	ォ	サ	ヒ	ロ		
C	▌	╭	ャ	シ	フ	ワ		
D	▌	╮	ュ	ス	ヘ	ン		
E	▌	╰	ョ	セ	ホ	“		
F	┼	╯	ッ	ソ	マ	°		

(4) CP437 (USA, Std-Europe)

	8	9	A	B	C	D	E	F
0	Ç	É	á	⣿	└	╨	α	≡
1	ü	æ	í	▓	┴	╤	β	±
2	é	Æ	ó	▓	┬	╥	Γ	≥
3	â	ô	ú	│	├	╙	π	≤
4	ä	ö	ñ	┤	─	╘	Σ	⌠
5	à	ò	Ñ	╡	┼	╒	σ	⌡
6	å	û	ª	╢	╞	╓	µ	÷
7	ç	ù	º	╖	╟	╫	τ	≈
8	ê	ÿ	¿	╕	╚	╪	Φ	°
9	ë	Ö	⌐	╣	╔	┘	θ	∙
A	è	Ü	¬	║	╩	┌	Ω	·
B	ï	¢	½	╗	╦	▉	δ	√
C	î	£	¼	╝	╠	▄	∞	ⁿ
D	ì	¥	¡	╜	═	▌	φ	²
E	Ä	Pt	≪	╛	╬	▐	∈	■
F	Å	ƒ	≫	┐	╧	▀	∩	

(5) Katakana

	8	9	A	B	C	D	E	F
0	_	┴		￣	タ	ミ	二	×
1	▁	┬	°	ア	チ	ム	卜	円
2	▂	┤	｢	イ	ツ	メ	井	年
3	▃	├	｣	ウ	テ	モ	刊	月
4	▄	─	、	エ	ト	ヤ	◢	日
5	▅	┼	・	オ	ナ	ユ	◣	時
6	▆	ﾟ	ヲ	カ	ニ	ヨ	◥	分
7	▇	｜	ァ	キ	ヌ	ラ	◤	秒
8	▏	｢	ィ	ク	ネ	リ	♠	〒
9	▎	｣	ゥ	ケ	ノ	ル	♥	市
A	▍	｡	ェ	コ	ハ	レ	♦	区
B	▌	､	ォ	サ	ヒ	ロ	♣	町
C	▋	｡	ャ	シ	フ	ワ	●	村
D	▊	､	ュ	ス	ヘ	ン	○	人
E	▉	･	ョ	セ	ホ	゛	／	▒
F	┼	ﾉ	ッ	ソ	マ	゜	＼	

(6) CP858 (Multilingual)

	8	9	A	B	C	D	E	F
0	Ç	É	á	⣿	└	ð	Ó	—
1	ü	æ	í	▓	┴	Ð	ß	±
2	é	Æ	ó	▓	┬	Ê	Ô	=
3	â	ô	ú	│	├	Ë	Ò	¾
4	ä	ö	ñ	┤	─	È	õ	¶
5	à	ò	Ñ	Á	┼	€	Õ	§
6	å	û	ª	Â	ã	Í	µ	÷
7	ç	ù	º	À	Ã	Î	þ	¸
8	ê	ÿ	¿	©	╚	Ï	Þ	°
9	ë	Ö	®	╣	╔	┘	Ú	¨
A	è	Ü	¬	║	╩	┌	Û	·
B	ï	ø	½	╗	╦	▉	Ù	¹
C	î	£	¼	╝	╠	▄	ý	³
D	ì	Ø	¡	¢	═	¦	Ý	²
E	Ä	×	≪	¥	╬	Ì	¯	■
F	Å	ƒ	≫	┐	¤	▀	´	

(7) CP860 (Portuguese)

	8	9	A	B	C	D	E	F
0	Ç	É	á	⣿	└	╨	α	≡
1	ü	À	í	▓	┴	╤	β	±
2	é	È	ó	▓	┬	╥	Γ	≥
3	â	ô	ú	│	├	╙	π	≤
4	ã	õ	ñ	┤	─	╘	Σ	⌠
5	à	ò	Ñ	╡	┼	╒	σ	⌡
6	Á	Ú	ª	╢	╞	╓	µ	÷
7	ç	ù	º	╖	╟	╫	τ	≈
8	ê	Ì	¿	╕	╚	╪	Φ	°
9	Ê	Õ	Ò	╣	╔	┘	θ	∙
A	è	Ü	¬	║	╩	┌	Ω	.
B	Í	¢	½	╗	╦	▉	δ	√
C	Ô	£	¼	╝	╠	▄	∞	ⁿ
D	ì	Ù	¡	╜	═	▌	φ	²
E	Ã	Pt	≪	╛	╬	▐	∈	■
F	Â	Ó	≫	┐	╧	▀	∩	

(8) CP863 (Canadian-French)

	8	9	A	B	C	D	E	F
0	Ç	É	¦	⣿	└	╨	α	≡
1	ü	È	´	▓	┴	╤	β	±
2	é	Ê	ó	▒	┬	╥	Γ	≥
3	â	ô	ú	┤	├	╙	π	≤
4	Â	Ë	¨	┤	─	╘	Σ	⌠
5	à	Ï	›	╡	┼	╒	σ	⌡
6	¶	û	ª	╢	╞	╓	µ	÷
7	ç	ù	‾	╖	╟	╫	τ	≈
8	ê	¤	Î	╕	╚	╪	Φ	°
9	ë	Ô	⌐	╣	╔	┘	θ	∙
A	è	Ü	¬	║	╩	┌	Ω	·
B	ï	¢	½	╗	╦	▉	δ	√
C	î	£	¼	╝	╠	▄	∞	n
D	=	Ù	¾	╜	═	▌	φ	²
E	À	Û	≪	╛	╬	▐	∈	■
F	§	ƒ	≫	┐	╧	▀	∩	

(9) CP865 (Nordic)

	8	9	A	B	C	D	E	F
0	Ç	É	á	⣿	└	╨	α	≡
1	ü	æ	í	▓	┴	╤	β	±
2	é	Æ	ó	▒	┬	╥	Γ	≥
3	â	ô	ú	┤	├	╙	π	≤
4	ä	ö	ñ	┤	─	╘	Σ	⌠
5	à	ò	Ñ	╡	┼	╒	σ	⌡
6	å	û	ª	╢	╞	╓	µ	÷
7	ç	ù	º	╖	╟	╫	τ	≈
8	ê	ÿ	¿	╕	╚	╪	Φ	°
9	ë	Ö	⌐	╣	╔	┘	θ	∙
A	è	Ü	¬	║	╩	┌	Ω	·
B	ï	ø	½	╗	╦	▉	δ	√
C	î	£	¼	╝	╠	▄	∞	n
D	ì	Ø	¡	╜	═	▌	φ	²
E	Ä	₧	≪	╛	╬	▐	∈	■
F	Å	ƒ	¤	┐	╧	▀	∩	

(10) CP852(Eastern Europe)

	8	9	A	B	C	D	E	F
0	Ç	É	á	⣿	└	đ	Ó	-
1	ü	Ĺ	í	▓	┴	Đ	ß	˝
2	é	Í	ó	▒	┬	Ď	Ô	˛
3	â	ô	ú	┤	├	Ë	Ń	ˇ
4	ä	ö	Ą	┤	—	ď	ń	˘
5	ů	Ľ	a	Á	┼	Ň	ň	§
6	ć	ľ	Ž	Â	Ă	Í	Š	÷
7	ç	Ś	ž	Ě	ă	Î	š	¸
8	ł	ś	Ę	Ş	╚	ě	Ŕ	°
9	ë	Ö	ę	╣	╔	┘	Ú	¨
A	Ő	Ü	¬	║	╩	┌	ŕ	•
B	ő	Ť	ź	╗	╦	▉	Ű	ű
C	î	ť	Č	╝	╠	▄	ý	Ř
D	Ź	Ł	ş	Ż	=	Ţ	Ý	ř
E	Ä	×	«	ż	╬	Ů	ţ	▪
F	Ć	č	»	┐	¤	▀	´	

(11) CP866(Russian)

	8	9	A	B	C	D	E	F
0	А	Р	а	⣿	└	╨	р	Ё
1	Б	С	б	▓	┴	╤	с	ё
2	В	Т	в	▒	┬	╥	т	Є
3	Г	У	г	┤	├	╙	у	є
4	Д	Ф	д	┤	—	╘	ф	Ї
5	Е	Х	е	╡	┼	╒	х	ї
6	Ж	Ц	ж	╢	╞	╓	ц	Ў
7	З	Ч	з	╖	╟	╫	ч	ў
8	И	Ш	и	╕	╚	╪	ш	°
9	Й	Щ	й	╣	╔	┘	щ	∙
A	К	Ъ	к	║	╩	┌	ъ	·
B	Л	Ы	л	╗	╦	▉	ы	√
C	М	Ь	м	╝	╠	▄	ь	№
D	Н	Э	н	╜	═	▌	э	¤
E	О	Ю	о	╛	╬	▐	ю	■
F	П	Я	п	┐	╧	▀	я	

(12) CP857 (Turkish)

	8	9	A	B	C	D	E	F
0	Ç	É	á	⠿	└	o̲	Ó	–
1	ü	æ	í	▒	┴	a̲	β	±
2	é	Æ	ó	▓	┬	Ê	Ô	
3	â	ô	ú	│	├	Ë	Ò	3/4
4	ä	ö	ñ	┤	─	È	õ	¶
5	à	ò	Ñ	Á	┼		Õ	§
6	å	û	Ğ	Â	ã	Í	µ	+
7	ç	ù	ğ	À	Ã	Î		¸
8	ê	‡	¿	©	╚	Ï	×	°
9	ë	Ö	®	╣	╔	┘	Ú	¨
A	è	Ü	¬	║	╩	┌	Û	•
B	ï	ø	1/2	╗	╦	█	Ù	¹
C	î	£	1/4	╝	╠	▄	¡	³
D	ı	Ø	¡	¢	═	¦	Ÿ	²
E	Ä	Ş	«	¥	╬	¡	¯	■
F	Å	ş	»	┐	¤	▀	´	

(13) WPC1252 (Windows Latin1)

	8	9	A	B	C	D	E	F
0	€			°	À	Ð	à	ð
1		‘	¡	±	Á	Ñ	á	ñ
2	‚	’	¢	²	Â	Ò	â	ò
3	ƒ	“	£	³	Ã	Ó	ã	ó
4	„	”	¤	´	Ä	Ô	ä	ô
5	…	•	¥	µ	Å	Õ	å	õ
6	†	–	¦	¶	Æ	Ö	æ	ö
7	‡	—	§	·	Ç	×	ç	÷
8	ˆ	˜	¨	¸	È	Ø	è	ø
9	‰	™	©	¹	É	Ù	é	ù
A	Š	š	ª	º	Ê	Ú	ê	ú
B	‹	›	«	»	Ë	Û	ë	û
C	Œ	œ	¬	¼	Ì	Ü	ì	ü
D			-	½	Í	Ý	í	ý
E			®	¾	Î	Þ	î	þ
F		Ÿ	¯	¿	Ï	ß	ï	ÿ

(14) CP864 (Arabic)

	8	9	A	B	C	D	E	F
0	°	β	(RSP)	·	¢	ذ	ـ	ـّ
1	·	∞	(SHY)	١	ء	ر	ف	ـّ
2	•	φ	ـّ	٢	آ	ز	ق	ن
3	√	±	£	٣	أ	س	ك	ه
4	▒	½	¤	٤	ؤ	ش	ل	ـَ
5	─	¼	٦	٥	ع	ص	م	ى
6	╷	≈		٦	ـً	ض	ن	ي
7	┼	«	€	٧	ا	ط	ه	
8	┤	»	١	٨	ب	ظ	و	ق
9	┬	لأ	ب	٩	ة	ع	ى	لآ
A	┴	لأ	ت	ف	ت	غ	ي	لآ
B	┴		ث	؛	ث	إ	ض	ل
C	┐		،	س	ج	¬	ـعـ	ك
D	┌	لا	ج	ش	ح	÷	خ	ي
E	└	لا	ح	ص	خ	×	غ	■
F	┘	،	خ	؟	د	ع	م	

(15) CP869 (Greek)

	8	9	A	B	C	D	E	F
0		Ί	ϊ		╚	Τ	ζ	(SHY)
1		Ϊ	ί	▒	╩	Υ	η	±
2		Ό	ό	▓	╬	Φ	θ	υ
3			ύ	╷	╠	Χ	ι	φ
4			Α	┤	═	Ψ	κ	χ
5		Ύ	Β	Κ	┼	Ω	λ	§
6	Ά	Ϋ	Γ	Λ	Π	α	μ	ψ
7	€	©	Δ	Μ	Ρ	β	ν	
8	·	Ώ	Ε	Ν	╚	γ	ξ	°
9	¬	²	Ζ	╣	╔	┘	ο	¨
A	¦	³	Η	╢	╩	┌	π	ω
B	‘	ά	½	╗	╦	▄	ρ	ϋ
C	’	£	Θ	╝	╠	▄	σ	ύ
D	Έ	έ	Ι	Ξ	═	δ	ς	ώ
E	—	ή	«	Ο	╬	ε	τ	■
F	Ή	ί	»	┐	Σ	▄	´	(RSP)

9.2 International Character Code Table

	Country	23	24	40	5B	5C	5D	5E	60	7B	7C	7D	7E
0	U.S.A	#	$	@	[	\	]	^	'	{	|	}	~
1	France	#	$	à	°	ç	§	^	'	é	ù	è	¨
2	Germany	#	$	§	Ä	Ö	Ü	^	'	ä	ö	Ü	ß
3	U.K.	£	$	@	[	\	]	^	'	{	|	}	~
4	Denmark I	#	$	@	Æ	Ø	Å	^	'	æ	ø	å	~
5	Sweden	#	¤	É	Ä	Ö	Å	Ü	é	ä	ö	å	ü
6	Italy	#	$	@	°	\	é	^	ù	à	ò	è	ì
7	Spain I	Pt	$	@	¡	Ñ	¿	^	'	¨	ñ	}	~
8	Japan	#	$	@	[	¥	]	^	'	{	|	}	~
9	Norway	#	¤	É	Æ	Ø	Å	Ü	é	æ	ø	å	ü
10	Denmark II	#	$	É	Æ	Ø	Å	Ü	é	æ	ø	å	ü
11	Spain II	#	$	á	¡	Ñ	¿	é	'	ì	ñ	ó	ú
12	Latin	#	$	á	¡	Ñ	¿	é	ü	ì	ñ	ó	ú
13	Korea	#	$	@	[	₩	]	^	'	{	|	}	~

10. EXTERNAL DIMENSIONS

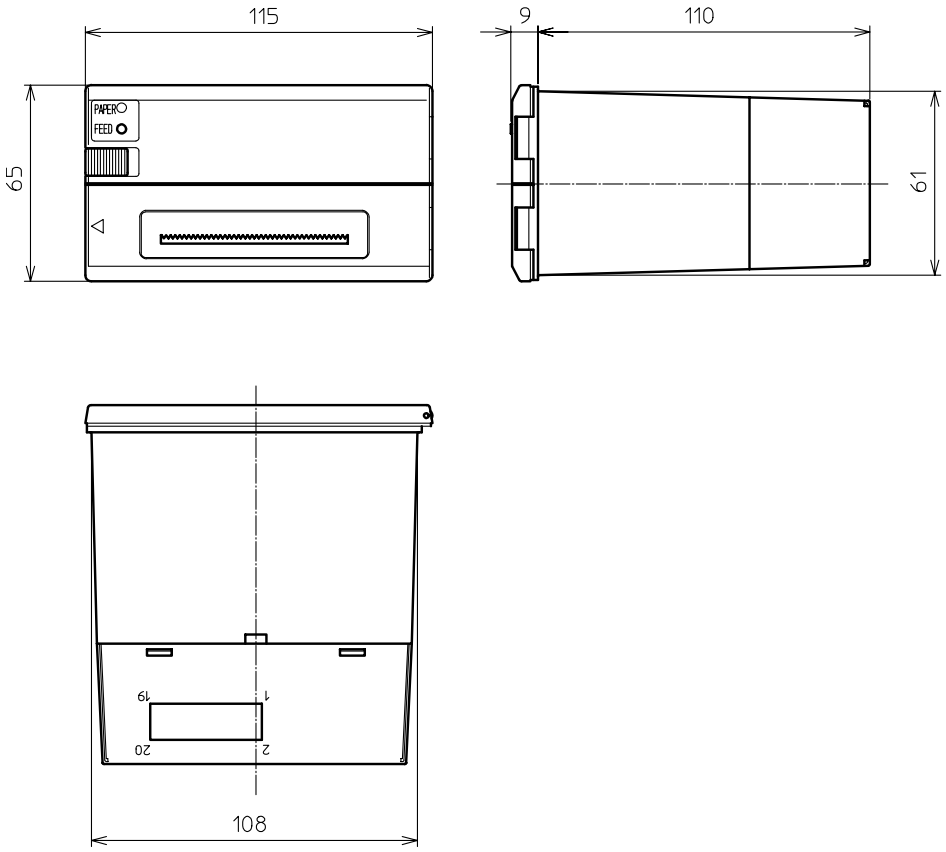

CITIZEN SYSTEMS JAPAN CO., LTD.
6-1-12, Tanashi-cho, Nishi-Tokyo-shi Tokyo, 188-8511, Japan
Tel: +81 (0) 42 468 4608 Fax: +81 (0) 42 468 4996
http://www.citizen-systems.co.jp

1.02E-0708 Printed in Japan